DRAINAGE REPORT

4150 WEST: MAJESTIC RISE PARKWAY TO 12600 SOUTH

PIN: 15913

NOVEMBER 2019

PREPARED BY

HORROCKS ENGINEERS

PREPARED FOR

UTAH DEPARTMENT OF TRANSPORTATION

HORROCKS ENGINEERS

2162 West Grove Parkway Ste 400
Pleasant Grove, Utah 84062
www.horrocks.com

TABLE OF CONTENTS

TABLES

FIGURES

1 INTRODUCTION

1.1 PURPOSE AND PROJECT LIMITS

This report, prepared for Riverton City and the Utah Department of Transportation (UDOT), documents the drainage analysis and design for the 4150 West: Majestic Rise Parkway to 12600 South project (The Project). It outlines the design criteria used for the hydrologic and hydraulic analysis and design of the drainage system. It also provides calculations and summaries of design parameters such that future parties may understand the basis of the design and performance of the drainage features. The existing and proposed drainage systems are discussed, along with applicable assumptions and agreements.

1.2 LOCATION

The Project is located in Riverton City (the City), Salt Lake County, Utah beginning at the east end of the newly constructed Majestic Rise Parkway and ending at the intersection of 4150 west and 12600 south. See Figures 1 and 2 for project location and alignment maps.

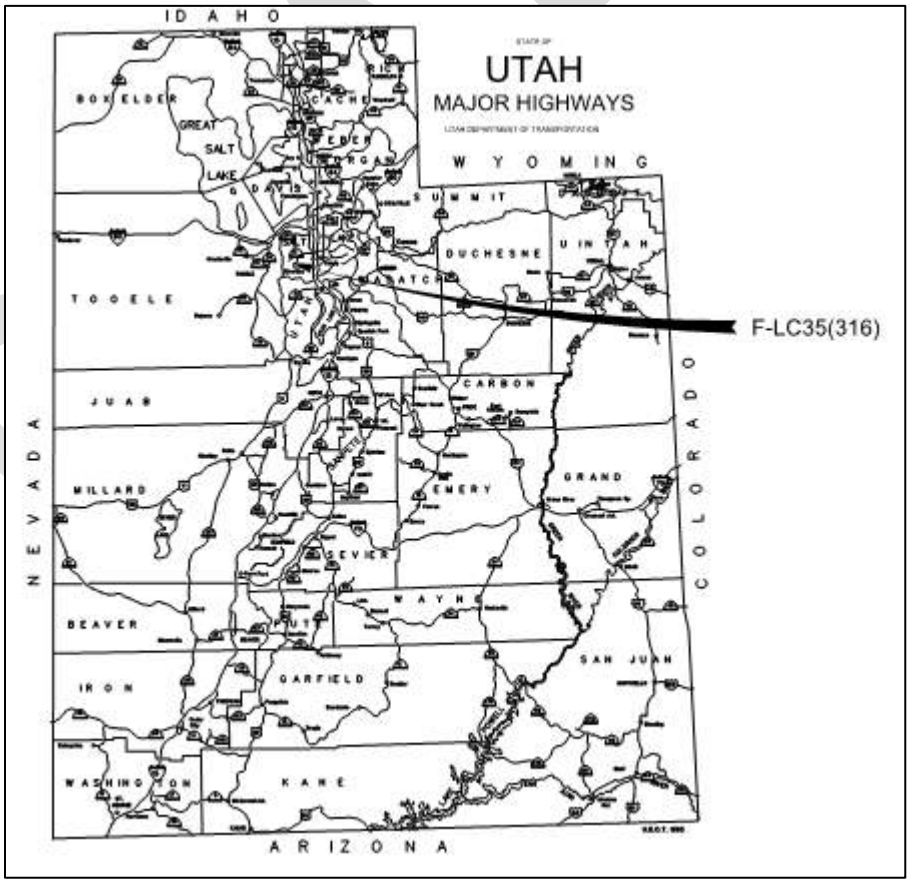

Figure 1: Project Location

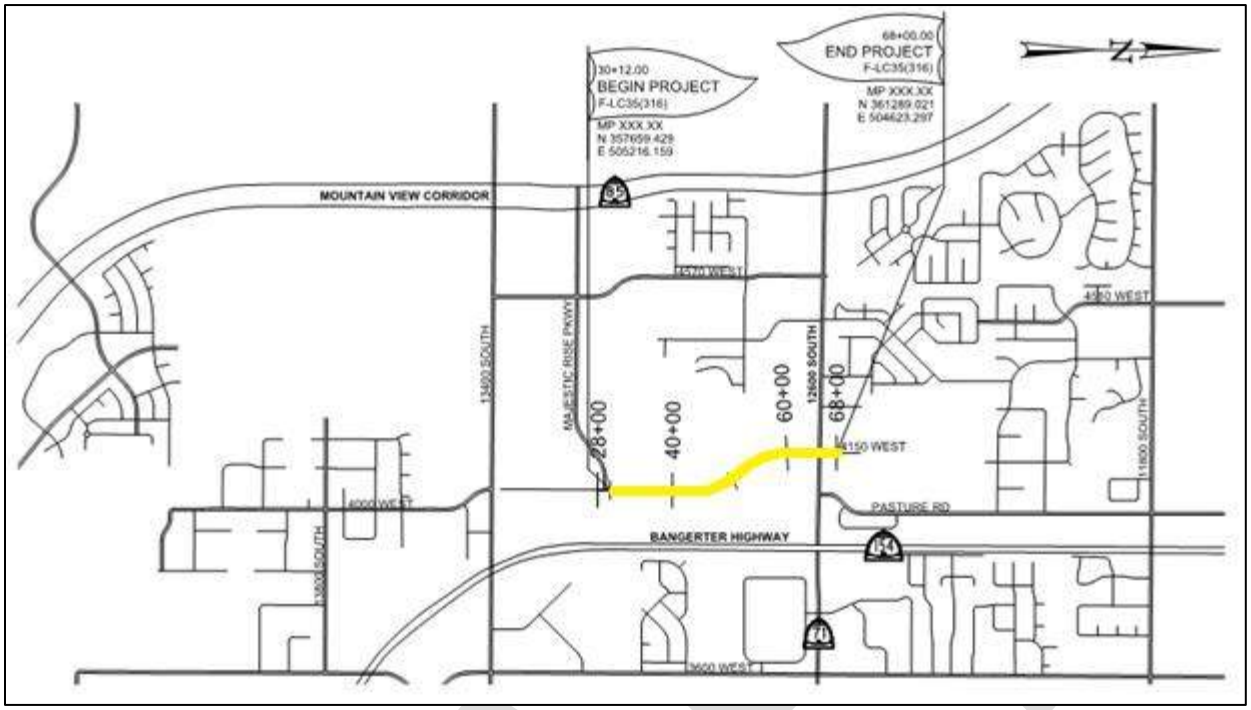

Figure 2: Project Alignment

1.3 CONSTRUCTION AND IMPROVEMENTS

Construction activities involved with The Project will include the construction of a new 4-lane road between Majestic Rise Parkway and 12600 South. The Project will include curb & gutter and sidewalks, a raised median island, storm drain, sanitary sewer, and water utility improvements

1.4 DRAINAGE INVESTIGATION

Existing conditions were explored using aerial photographs, land survey, and site investigations. Subsurface Utility Engineering (SUE) was used to locate existing underground utilities to quantify and limit impacts caused by new storm drain systems. The project is located primarily in a green field location where no utilities are located.

2 EXISTING CONDITIONS

2.1 TOPOGRAPHY

Within the project vicinity, the topography generally slopes eastward at a 2% decline and in a southward decline at roughly 1%. The terrain consist of mainly farmland with commercial properties running along 12600 south.

2.2 EXISTING DRAINAGE SYSTEMS

Because the connector road is new infrastructure, there is a limited amount of existing storm drainage elements within the project boundaries. The existing drainage system within project limits that will be effected is located on 12600 South. On 12600 South there is curb and gutter and a storm drain trunk line that runs from west to east and outfalls into a detention basin on the northeast side of the intersection of 12600 South and 3260 West. In the southwest quadrant of the intersection of 4150 West and 12600 South, one existing catch basin will need to be relocated to be in the proposed gutter.

Majestic Rise Parkway is also newly constructed infrastructure. Storm runoff along this road is collected via curb & gutter and conveyed by inlets and storm pipe to a detention basin near 13400 South.

2.3 KNOWN DRAINAGE DEFICIENCIES

There are not any existing drainage deficiencies as most of the project is new infrastructure.

3 DRAINAGE DESIGN CRITERIA AND PARAMETERS

In general, the drainage system has been designed to meet the most stringent criteria between UDOT and Riverton City. Table 1 summarizes the general drainage parameters and design criteria used for the project.

Table 1: General Drainage Parameters and Design Criteria

Parameter	Value
Method of Hydrologic Analysis	SCS unit hydrograph and Curve Number method, using SCS type II – 24 hour temporal distribution (cross drainage – culverts and channels, and large roadway drainage areas where applicable) Rational method (roadway drainage and storm drain design – small areas less than 300 acres)
Roadway Classification	4150 West – Principal Collector (45 mph Design Speed)
Precipitation	Precipitation Intensity-Duration-Frequency values from *NOAA Atlas 14, Vol. 1, Version 5*
Time of Concentration	SCS lag time equation – for SCS unit hydrograph method Appropriate sheet flow, shallow concentrated flow, and open channel flow equations for rational method. Minimum Time of Concentration of 5 minutes for paved areas

Runoff Coefficient	Paved areas – 0.90 Unpaved shoulder, side slopes, and ditches – 0.20
Design Storm	See Table 2
Spread Design Criteria	Maximum spread – 4150 West: Edge of shoulder in 10-year event Maximum spread at major sag points – Edge of shoulder + 3 feet in 50-year event
Storm Drain Design Criteria	Pipe Material – Reinforced Concrete Pipe (RCP) Minimum pipe size – 18 inch Minimum cover – 2 feet for RCP Storm drains to be sized based on full flow capacity. The HGL for the design storm shall not rise above the crown of the pipe during the design event. Minimum pipe slope = 0.3%. Minimum pipe velocity = 2.5 fps. Maximum access hole spacing – 300 feet for pipe sizes 24' or smaller, 400 feet for pipe sizes 27"-36", 500 feet for pipe sizes 42" or larger. Use Rectangular Grate and Frame (UDOT Std Dwg GF 9). Clogging Factor – 30% for inlets on grade, 50% for inlets at sag points. Use flanking inlets at major sag locations Limit bypass to the following: • 0.25 cfs around curb returns, where bypass flow would cross a travel lane or a pedestrian ramp. • 0.10 cfs across bridge expansion joints, and at the last inlet placed upstream from superelevation transitions.

3.1 PRECIPITATION DATA

Precipitation frequency estimates were obtained from National Oceanic and Atmospheric Administration (NOAA) Altas 14 via NOAA's National Weather Service Precipitation Frequency Data Server (PFDS). Precipitation values for both intensity and depth are found in Appendix A.

3.2 DESIGN EVENTS

The roadway drainage was designed consistent with the UDOT 2018 Manual of Instruction Roadway Drainage (MOI). Table 2 lists the design storm events required in the design for this project.

Table 2: Design Storm Events

Parameter	Value
Roadway Drainage System	10-year
Major Sag Points	50-year
Roadside Ditches	10- / 50-year

Design Storm

All inlets within the storm drain system not classified as a major sag were designed to capture runoff from the 10-year storm event. According to the UDOT MOI, a major sag is defined as "a low point where the stormwater has no conveyance pathway except through the storm drain system, and failure of the system would result in water depths on the roadway of 1.5 feet or greater." There is one major sag located near station 62+73. Storm drain pipes were sized such that they will not flow under pressure during the design event.

Inlets are spaced so as to limit spread in the 10-year event to the shoulder. At major sags, double grate catch basins and flanking inlets will be used to ensure spread is limited to the shoulder + 3 feet as per UDOT requirements.

Check Storm

The 50-year storm was modeled throughout the system to ensure that the hydraulic grade line (HGL) was at least 1 foot below the top of grate as per requirements in the UDOT MOI.

4 DRAINAGE SYSTEMS DESIGN

The roadway drainage design (including drainage basin, inlet, and storm drain design) was performed using the Storm and Sanitary design tools within Bentley's *Power InRoads V8i (SELECT Series 2)* and the Federal Highway Administration's *Hydraulic Toolbox 4.2*.

The drainage design parameters and design criteria outlined in Table 1 were used in the analysis to design the drainage systems. Detailed output calculations for the Storm and Sanitary model can be found in Appendix C for the design event. Refer to Appendix D for the drainage plan sheets and for drainage profiles showing hydraulic grade lines for the design storm.

4.1 DRAINAGE BASINS

Roadway drainage basins delineations are shown in Appendix B. The watersheds are delineated to include all areas draining to inlets located within the project. Drainage basin summary data are also included in Appendix B.

4.2 GENERAL STORM DRAIN DESIGN

Inlet and pipe design summary data are included in Appendix B. Inlets were located and designed to limit spread and bypass to allowable limits per the parameter and design criteria outlined in Table 1.

4.3 4150 WEST STORM DRAIN DESIGN

Along 4150 West, storm runoff is collected via curb and gutter and conveyed south through a series of inlets and storm pipe. The system discharges all flows to the existing system near the east end of Majestic Rise Parkway.

4.4 EROSION CONTROL

Gutter inlet barriers will be placed at each inlet to prevent sediment and debris from entering the storm drain system. Silt fences will be used along all cut slopes to prevent sediment from being discharges onto off-site areas.

4.5 OFFSITE FLOWS

Future development in the surrounding area may increase stormwater being sent to the proposed storm drain system. In coordinating with the City, it was decided to account for 0.1 cfs per acre from private future developments. These flows were modeled as injected flows into the nearest catch basin. Designing for these flows requires much of the trunk line to be at least 30 inch pipe. Appendix B includes a map and calculations estimating the flow contributions from future development.

4.6 CROSS CULVERTS

There are no cross culverts within the Project.

4.7 DETENTION BASINS

There are no detention basins within the Project

5 MAINTENANCE AND RECOMMENDATIONS

Regular and appropriate maintenance of the drainage facilities is essential to ensure they function as designed. These procedures should include the following regular inspection of pipes, inlets and manholes.

Regular maintenance of upstream inlets in channels and inlets in sag locations is critical to prevent clogging and flooding of the surrounding areas. However, all inlets should be kept clean in order to limit spread and unintended bypass to downstream systems.

6 CONCLUSION

Drainage plans were prepared for this project to a full design level. The drainage layout was analyzed and designed to allow the storm drain system to be fully functional and constructible. Any need for design modification should be coordinated with the Engineer of Record. Refer to Appendix D for the drainage plans and details.

REFERENCES

1. United States Department of Commerce, National Oceanic and Atmospheric Administration, National Weather Service. NOAA Atlas 14, Precipitation-Frequency Atlas of the United States, Volume 1, Version 5. American Fork, Utah, USA, Coordinates: 40.4098, -111.7869, Elevation: 4816.71 ft. Extracted from the Precipitation Frequency Data Server (https://hdsc.nws.noaa.gov/hdsc/pfds/index.html) on April 23, 2019.

2. UDOT, Stormwater Quality Design Manual

3. UDOT, Drainage Manual of Instruction

APPENDICES

APPENDIX A

PRECIPITATION DATA: INTENSITY-DURATION-FREQUENCY

PRECIPITATION DATA: DEPTH-DURATION-FREQUENCY

NOAA Atlas 14, Volume 1, Version 5
Location name: Riverton, Utah, USA*
Latitude: 40.5185°, Longitude: -111.9904°
Elevation: 4677.04 ft**
* source: ESRI Maps
** source: USGS

POINT PRECIPITATION FREQUENCY ESTIMATES

Sanja Perica, Sarah Dietz, Sarah Heim, Lillian Hiner, Kazungu Maitaria, Deborah Martin, Sandra Pavlovic, Ishani Roy, Carl Trypaluk, Dale Unruh, Fenglin Yan, Michael Yekta, Tan Zhao, Geoffrey Bonnin, Daniel Brewer, Li-Chuan Chen, Tye Parzybok, John Yarchoan

NOAA, National Weather Service, Silver Spring, Maryland

PF_tabular | PF_graphical | Maps_&_aerials

PF tabular

PDS-based point precipitation frequency estimates with 90% confidence intervals (in inches/hour)[1]

Duration	Average recurrence interval (years)									
	1	2	5	10	25	50	100	200	500	1000
5-min	1.48 (1.30-1.72)	1.87 (1.64-2.17)	2.57 (2.24-3.00)	3.22 (2.77-3.77)	4.26 (3.58-5.02)	5.23 (4.27-6.22)	6.37 (5.03-7.64)	7.72 (5.86-9.43)	9.88 (7.10-12.4)	11.8 (8.15-15.2)
10-min	1.13 (0.984-1.31)	1.42 (1.25-1.66)	1.96 (1.71-2.28)	2.45 (2.11-2.86)	3.25 (2.72-3.81)	3.98 (3.25-4.73)	4.85 (3.83-5.82)	5.87 (4.46-7.18)	7.52 (5.41-9.42)	9.01 (6.20-11.5)
15-min	0.932 (0.812-1.08)	1.18 (1.03-1.37)	1.62 (1.41-1.88)	2.02 (1.74-2.37)	2.68 (2.25-3.15)	3.29 (2.68-3.91)	4.01 (3.17-4.81)	4.85 (3.68-5.93)	6.21 (4.47-7.78)	7.45 (5.12-9.54)
30-min	0.628 (0.548-0.728)	0.792 (0.694-0.922)	1.09 (0.950-1.27)	1.36 (1.17-1.59)	1.81 (1.52-2.12)	2.22 (1.81-2.63)	2.70 (2.13-3.24)	3.27 (2.48-4.00)	4.18 (3.01-5.24)	5.02 (3.45-6.43)
60-min	0.388 (0.339-0.450)	0.490 (0.430-0.570)	0.674 (0.588-0.785)	0.844 (0.727-0.986)	1.12 (0.938-1.31)	1.37 (1.12-1.63)	1.67 (1.32-2.00)	2.02 (1.54-2.47)	2.59 (1.86-3.24)	3.10 (2.14-3.98)
2-hr	0.243 (0.218-0.276)	0.304 (0.272-0.344)	0.396 (0.352-0.448)	0.483 (0.425-0.548)	0.625 (0.536-0.714)	0.755 (0.630-0.871)	0.908 (0.734-1.07)	1.09 (0.848-1.31)	1.39 (1.02-1.70)	1.65 (1.16-2.08)
3-hr	0.185 (0.169-0.207)	0.229 (0.208-0.255)	0.289 (0.262-0.323)	0.345 (0.309-0.385)	0.433 (0.381-0.488)	0.513 (0.441-0.583)	0.611 (0.510-0.716)	0.729 (0.589-0.878)	0.932 (0.710-1.15)	1.11 (0.812-1.40)
6-hr	0.120 (0.111-0.131)	0.147 (0.136-0.160)	0.179 (0.165-0.196)	0.208 (0.190-0.227)	0.251 (0.226-0.276)	0.286 (0.254-0.318)	0.328 (0.285-0.369)	0.377 (0.320-0.445)	0.471 (0.387-0.581)	0.563 (0.442-0.710)
12-hr	0.074 (0.068-0.080)	0.090 (0.083-0.098)	0.109 (0.100-0.119)	0.125 (0.114-0.137)	0.148 (0.134-0.163)	0.168 (0.149-0.186)	0.188 (0.165-0.211)	0.211 (0.182-0.241)	0.248 (0.207-0.290)	0.283 (0.227-0.356)
24-hr	0.043 (0.040-0.046)	0.053 (0.049-0.057)	0.063 (0.058-0.068)	0.071 (0.066-0.076)	0.082 (0.076-0.088)	0.091 (0.084-0.098)	0.100 (0.092-0.107)	0.108 (0.099-0.122)	0.126 (0.109-0.147)	0.143 (0.116-0.181)
2-day	0.025 (0.023-0.027)	0.030 (0.028-0.033)	0.036 (0.033-0.038)	0.040 (0.037-0.043)	0.046 (0.043-0.050)	0.051 (0.047-0.055)	0.056 (0.051-0.060)	0.060 (0.055-0.065)	0.066 (0.061-0.074)	0.072 (0.064-0.091)
3-day	0.018 (0.016-0.019)	0.022 (0.020-0.023)	0.026 (0.024-0.028)	0.029 (0.027-0.031)	0.034 (0.031-0.036)	0.037 (0.034-0.040)	0.040 (0.037-0.044)	0.044 (0.040-0.047)	0.049 (0.044-0.053)	0.053 (0.047-0.061)
4-day	0.014 (0.013-0.015)	0.017 (0.016-0.019)	0.021 (0.019-0.022)	0.023 (0.022-0.025)	0.027 (0.025-0.029)	0.030 (0.028-0.032)	0.033 (0.030-0.035)	0.036 (0.033-0.039)	0.040 (0.036-0.043)	0.043 (0.039-0.047)
7-day	0.009 (0.009-0.010)	0.011 (0.011-0.012)	0.014 (0.013-0.015)	0.015 (0.014-0.016)	0.018 (0.016-0.019)	0.019 (0.018-0.021)	0.021 (0.020-0.023)	0.023 (0.021-0.024)	0.025 (0.023-0.027)	0.026 (0.024-0.029)
10-day	0.007 (0.007-0.008)	0.009 (0.008-0.010)	0.011 (0.010-0.011)	0.012 (0.011-0.013)	0.014 (0.013-0.014)	0.015 (0.014-0.016)	0.016 (0.015-0.017)	0.017 (0.016-0.018)	0.018 (0.017-0.020)	0.019 (0.018-0.021)
20-day	0.005 (0.004-0.005)	0.006 (0.005-0.006)	0.007 (0.006-0.007)	0.008 (0.007-0.008)	0.009 (0.008-0.009)	0.009 (0.009-0.010)	0.010 (0.009-0.011)	0.011 (0.010-0.011)	0.011 (0.010-0.012)	0.012 (0.011-0.012)
30-day	0.004 (0.004-0.004)	0.005 (0.004-0.005)	0.005 (0.005-0.006)	0.006 (0.006-0.006)	0.007 (0.006-0.007)	0.007 (0.007-0.008)	0.008 (0.007-0.008)	0.008 (0.008-0.009)	0.009 (0.008-0.009)	0.009 (0.009-0.010)
45-day	0.003 (0.003-0.003)	0.004 (0.004-0.004)	0.004 (0.004-0.005)	0.005 (0.005-0.005)	0.005 (0.005-0.006)	0.006 (0.006-0.006)	0.006 (0.006-0.007)	0.007 (0.006-0.007)	0.007 (0.007-0.007)	0.007 (0.007-0.008)
60-day	0.003 (0.003-0.003)	0.003 (0.003-0.004)	0.004 (0.004-0.004)	0.004 (0.004-0.005)	0.005 (0.005-0.005)	0.005 (0.005-0.005)	0.006 (0.005-0.006)	0.006 (0.005-0.006)	0.006 (0.006-0.006)	0.006 (0.006-0.007)

[1] Precipitation frequency (PF) estimates in this table are based on frequency analysis of partial duration series (PDS).

Numbers in parenthesis are PF estimates at lower and upper bounds of the 90% confidence interval. The probability that precipitation frequency estimates (for a given duration and average recurrence interval) will be greater than the upper bound (or less than the lower bound) is 5%. Estimates at upper bounds are not checked against probable maximum precipitation (PMP) estimates and may be higher than currently valid PMP values.

Please refer to NOAA Atlas 14 document for more information.

Back to Top

PF graphical

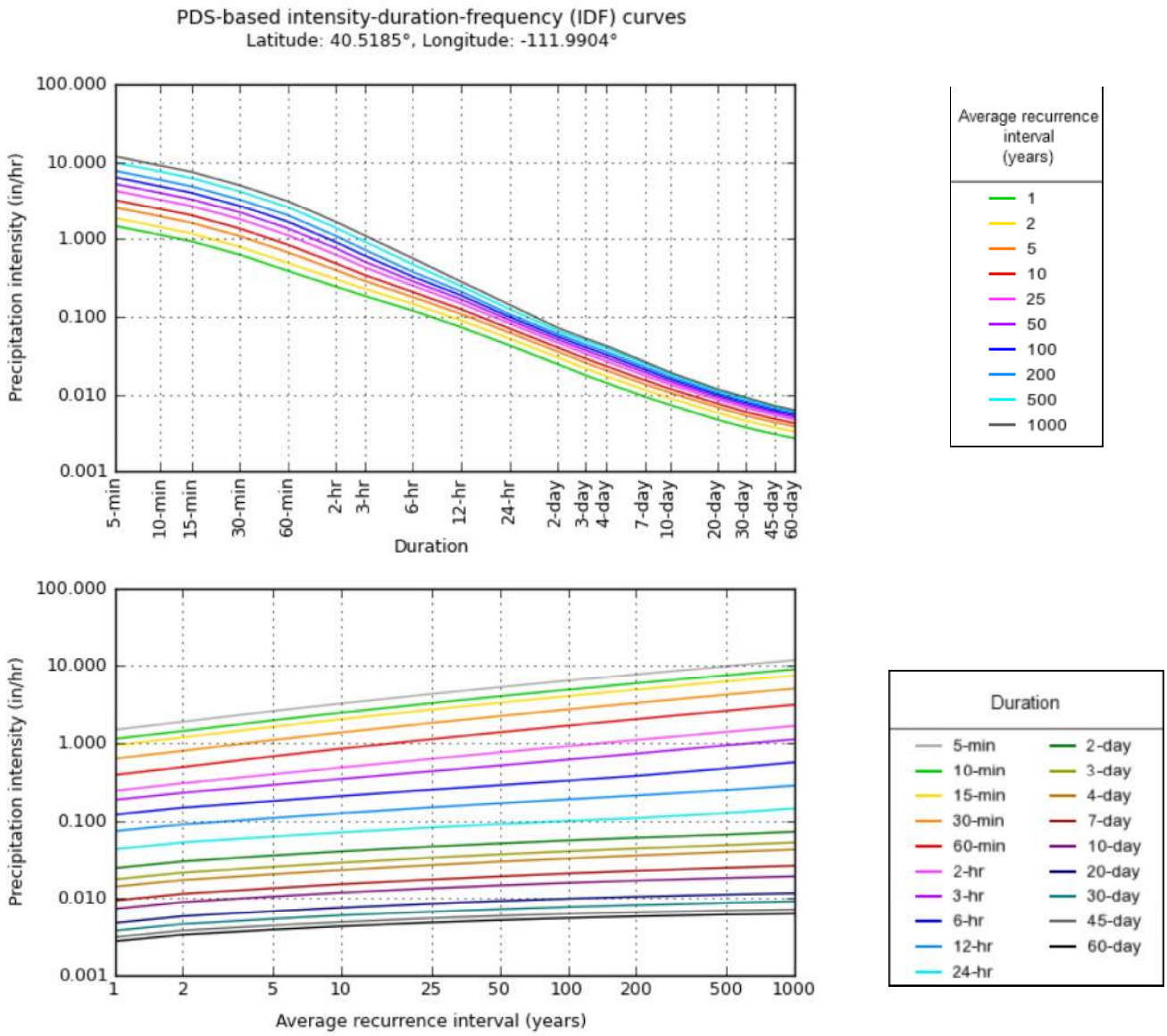

NOAA Atlas 14, Volume 1, Version 5

Created (GMT): Thu Nov 14 20:37:04 2019

Back to Top

Maps & aerials

Small scale terrain

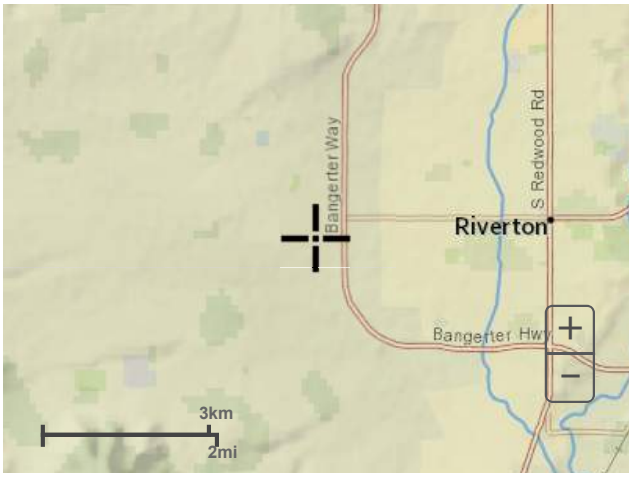

Large scale terrain

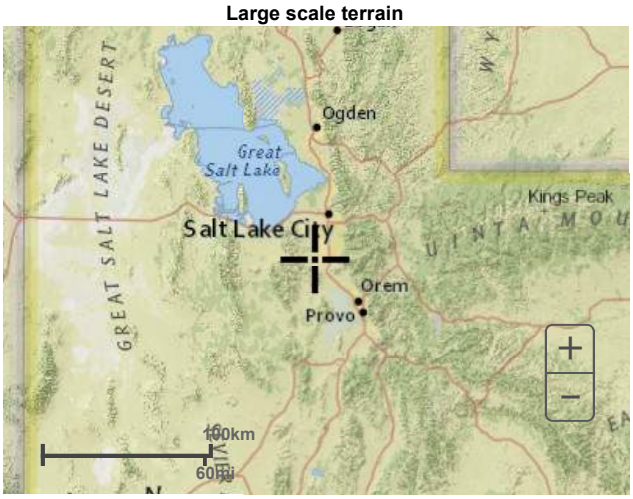

Large scale map

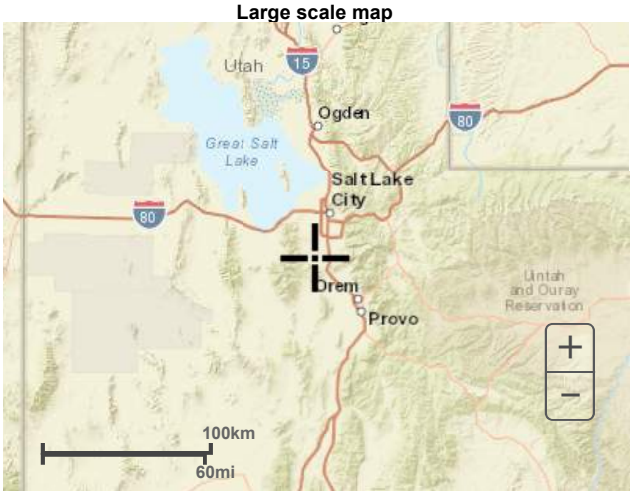

Large scale aerial

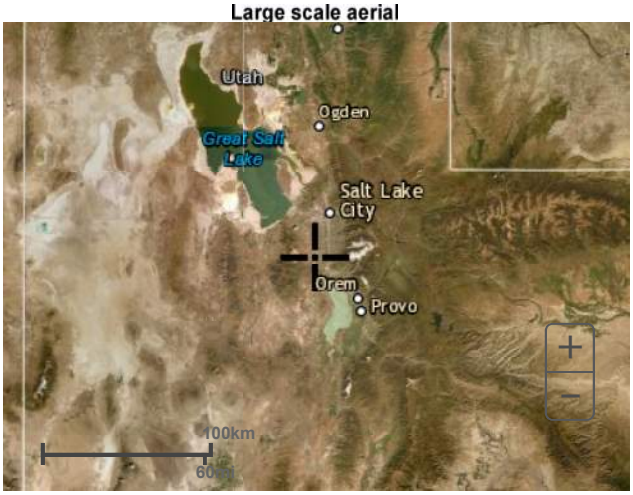

Back to Top

US Department of Commerce
National Oceanic and Atmospheric Administration
National Weather Service
National Water Center
1325 East West Highway
Silver Spring, MD 20910
Questions?: HDSC.Questions@noaa.gov

NOAA Atlas 14, Volume 1, Version 5
Location name: Riverton, Utah, USA*
Latitude: 40.5185°, Longitude: -111.9904°
Elevation: 4677.04 ft**
* source: ESRI Maps
** source: USGS

POINT PRECIPITATION FREQUENCY ESTIMATES

Sanja Perica, Sarah Dietz, Sarah Heim, Lillian Hiner, Kazungu Maitaria, Deborah Martin, Sandra Pavlovic, Ishani Roy, Carl Trypaluk, Dale Unruh, Fenglin Yan, Michael Yekta, Tan Zhao, Geoffrey Bonnin, Daniel Brewer, Li-Chuan Chen, Tye Parzybok, John Yarchoan

NOAA, National Weather Service, Silver Spring, Maryland

PF_tabular | PF_graphical | Maps_&_aerials

PF tabular

PDS-based point precipitation frequency estimates with 90% confidence intervals (in inches)[1]

Duration	Average recurrence interval (years)									
	1	2	5	10	25	50	100	200	500	1000
5-min	0.123 (0.108-0.143)	0.156 (0.137-0.181)	0.214 (0.187-0.250)	0.268 (0.231-0.314)	0.355 (0.298-0.418)	0.436 (0.356-0.518)	0.531 (0.419-0.637)	0.643 (0.488-0.786)	0.823 (0.592-1.03)	0.987 (0.679-1.26)
10-min	0.188 (0.164-0.218)	0.237 (0.208-0.276)	0.326 (0.285-0.380)	0.408 (0.352-0.477)	0.541 (0.454-0.635)	0.664 (0.542-0.788)	0.808 (0.638-0.970)	0.979 (0.743-1.20)	1.25 (0.901-1.57)	1.50 (1.03-1.92)
15-min	0.233 (0.203-0.270)	0.294 (0.258-0.342)	0.404 (0.353-0.471)	0.506 (0.436-0.592)	0.670 (0.563-0.788)	0.823 (0.671-0.977)	1.00 (0.792-1.20)	1.21 (0.921-1.48)	1.55 (1.12-1.95)	1.86 (1.28-2.39)
30-min	0.314 (0.274-0.364)	0.396 (0.347-0.461)	0.545 (0.475-0.634)	0.682 (0.587-0.797)	0.903 (0.758-1.06)	1.11 (0.904-1.32)	1.35 (1.07-1.62)	1.63 (1.24-2.00)	2.09 (1.51-2.62)	2.51 (1.73-3.21)
60-min	0.388 (0.339-0.450)	0.490 (0.430-0.570)	0.674 (0.588-0.785)	0.844 (0.727-0.986)	1.12 (0.938-1.31)	1.37 (1.12-1.63)	1.67 (1.32-2.00)	2.02 (1.54-2.47)	2.59 (1.86-3.24)	3.10 (2.14-3.98)
2-hr	0.486 (0.437-0.551)	0.607 (0.544-0.687)	0.792 (0.705-0.897)	0.966 (0.850-1.10)	1.25 (1.07-1.43)	1.51 (1.26-1.74)	1.82 (1.47-2.13)	2.18 (1.70-2.61)	2.77 (2.04-3.41)	3.31 (2.33-4.17)
3-hr	0.557 (0.508-0.623)	0.687 (0.626-0.766)	0.869 (0.787-0.969)	1.03 (0.928-1.16)	1.30 (1.14-1.47)	1.54 (1.32-1.75)	1.83 (1.53-2.15)	2.19 (1.77-2.64)	2.80 (2.13-3.44)	3.34 (2.44-4.21)
6-hr	0.718 (0.664-0.783)	0.881 (0.813-0.961)	1.07 (0.986-1.17)	1.25 (1.14-1.36)	1.50 (1.35-1.65)	1.71 (1.52-1.90)	1.96 (1.71-2.21)	2.26 (1.92-2.66)	2.82 (2.32-3.48)	3.37 (2.65-4.25)
12-hr	0.887 (0.820-0.964)	1.08 (1.00-1.18)	1.31 (1.21-1.43)	1.50 (1.38-1.65)	1.79 (1.62-1.97)	2.02 (1.80-2.24)	2.27 (1.99-2.55)	2.55 (2.19-2.90)	2.99 (2.49-3.49)	3.41 (2.73-4.30)
24-hr	1.03 (0.959-1.11)	1.26 (1.17-1.36)	1.50 (1.40-1.62)	1.70 (1.58-1.83)	1.97 (1.83-2.12)	2.18 (2.01-2.35)	2.39 (2.20-2.57)	2.60 (2.38-2.93)	3.02 (2.62-3.53)	3.44 (2.79-4.34)
2-day	1.18 (1.10-1.28)	1.45 (1.34-1.56)	1.72 (1.60-1.85)	1.94 (1.80-2.08)	2.23 (2.07-2.40)	2.45 (2.27-2.63)	2.68 (2.47-2.88)	2.90 (2.66-3.13)	3.19 (2.91-3.56)	3.48 (3.08-4.38)
3-day	1.27 (1.18-1.37)	1.55 (1.45-1.68)	1.85 (1.72-1.99)	2.09 (1.94-2.24)	2.41 (2.24-2.59)	2.66 (2.46-2.86)	2.91 (2.69-3.14)	3.17 (2.91-3.42)	3.50 (3.19-3.85)	3.79 (3.39-4.42)
4-day	1.36 (1.27-1.47)	1.66 (1.55-1.80)	1.97 (1.84-2.13)	2.23 (2.08-2.40)	2.59 (2.41-2.78)	2.87 (2.66-3.09)	3.15 (2.90-3.39)	3.43 (3.15-3.71)	3.81 (3.46-4.13)	4.10 (3.70-4.46)
7-day	1.58 (1.47-1.71)	1.93 (1.79-2.08)	2.28 (2.13-2.46)	2.57 (2.40-2.76)	2.95 (2.76-3.17)	3.24 (3.02-3.48)	3.53 (3.28-3.79)	3.82 (3.53-4.10)	4.18 (3.84-4.51)	4.45 (4.07-4.81)
10-day	1.76 (1.64-1.90)	2.16 (2.01-2.32)	2.54 (2.37-2.73)	2.85 (2.66-3.05)	3.24 (3.03-3.47)	3.53 (3.29-3.77)	3.81 (3.55-4.07)	4.08 (3.79-4.36)	4.41 (4.07-4.73)	4.64 (4.27-4.98)
20-day	2.28 (2.13-2.44)	2.79 (2.60-2.98)	3.28 (3.07-3.50)	3.65 (3.42-3.89)	4.12 (3.86-4.38)	4.45 (4.17-4.73)	4.76 (4.45-5.05)	5.04 (4.71-5.36)	5.38 (5.02-5.72)	5.60 (5.22-5.97)
30-day	2.71 (2.54-2.88)	3.31 (3.10-3.52)	3.87 (3.64-4.11)	4.30 (4.04-4.55)	4.85 (4.55-5.13)	5.23 (4.91-5.54)	5.60 (5.24-5.93)	5.93 (5.55-6.30)	6.34 (5.91-6.74)	6.61 (6.15-7.04)
45-day	3.36 (3.16-3.56)	4.09 (3.85-4.34)	4.76 (4.50-5.04)	5.28 (4.99-5.57)	5.92 (5.61-6.24)	6.36 (6.03-6.69)	6.77 (6.41-7.11)	7.12 (6.75-7.49)	7.51 (7.13-7.90)	7.74 (7.36-8.14)
60-day	3.95 (3.71-4.20)	4.81 (4.53-5.12)	5.60 (5.28-5.93)	6.19 (5.84-6.55)	6.94 (6.54-7.33)	7.45 (7.03-7.87)	7.92 (7.47-8.37)	8.34 (7.86-8.83)	8.80 (8.30-9.32)	9.07 (8.57-9.61)

[1] Precipitation frequency (PF) estimates in this table are based on frequency analysis of partial duration series (PDS).

Numbers in parenthesis are PF estimates at lower and upper bounds of the 90% confidence interval. The probability that precipitation frequency estimates (for a given duration and average recurrence interval) will be greater than the upper bound (or less than the lower bound) is 5%. Estimates at upper bounds are not checked against probable maximum precipitation (PMP) estimates and may be higher than currently valid PMP values.

Please refer to NOAA Atlas 14 document for more information.

Back to Top

PF graphical

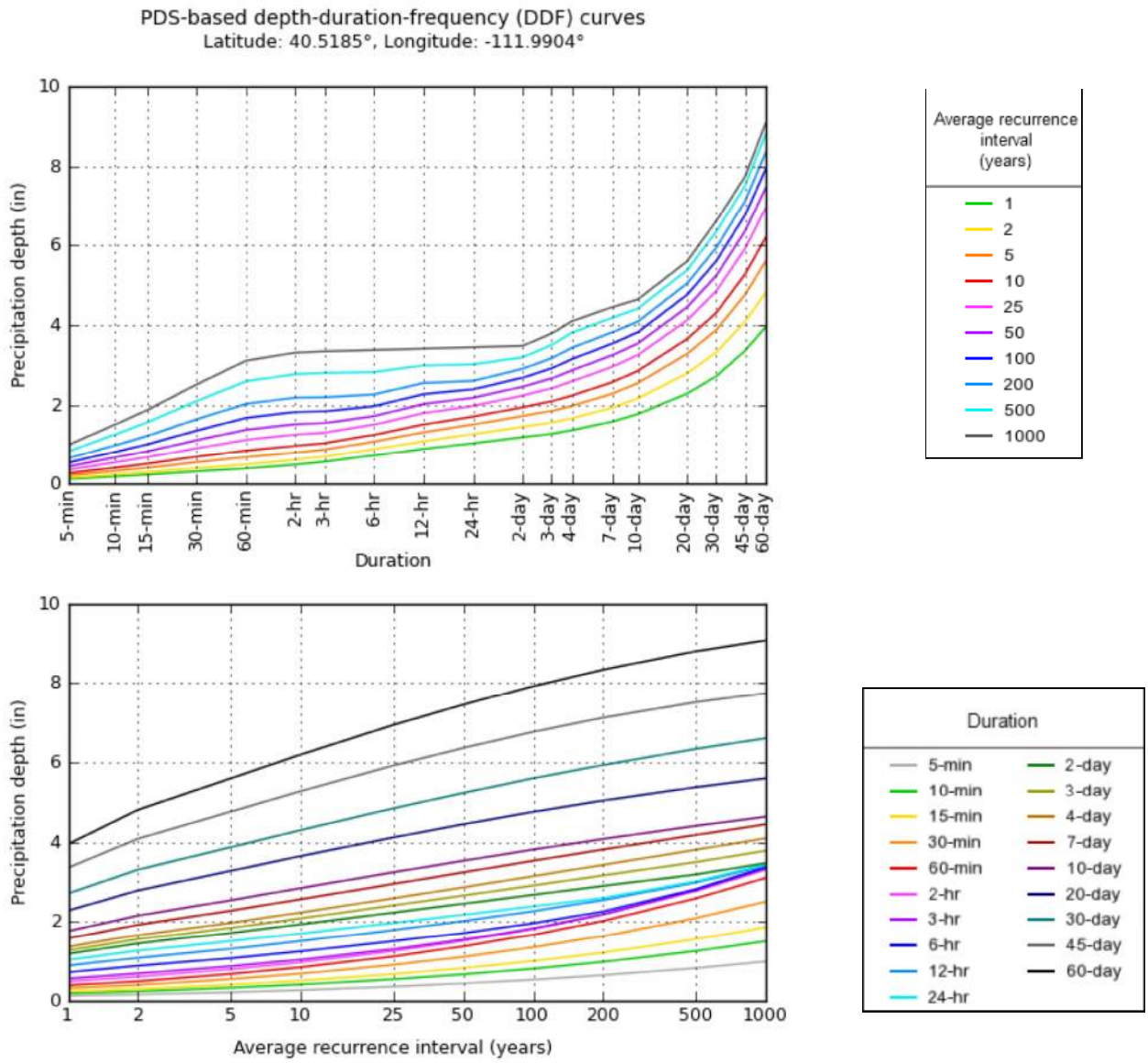

NOAA Atlas 14, Volume 1, Version 5 Created (GMT): Thu Nov 14 20:36:54 2019

Back to Top

Maps & aerials

Small scale terrain

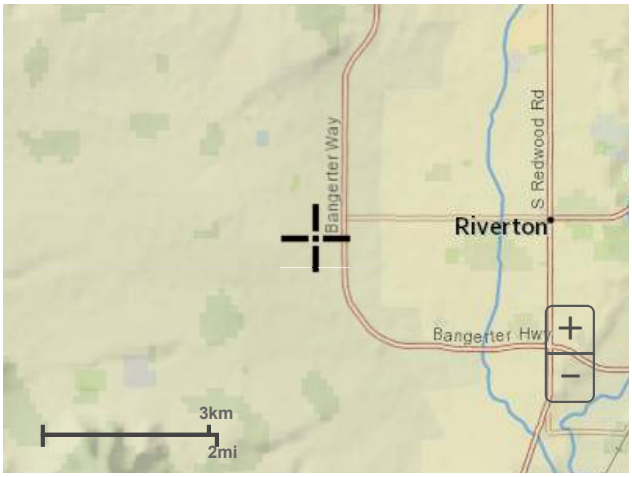

Large scale terrain

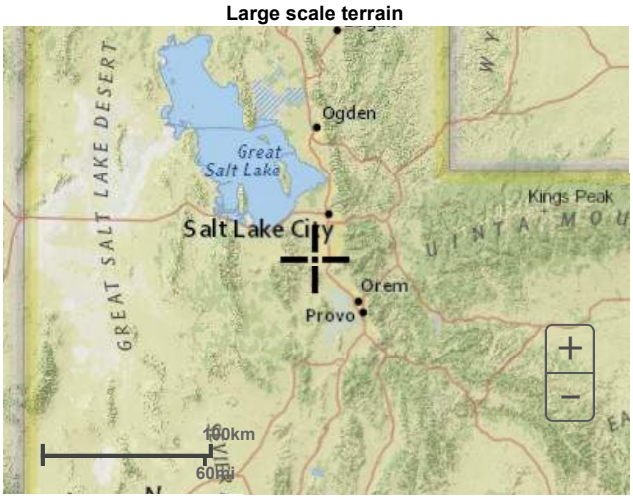

Large scale map

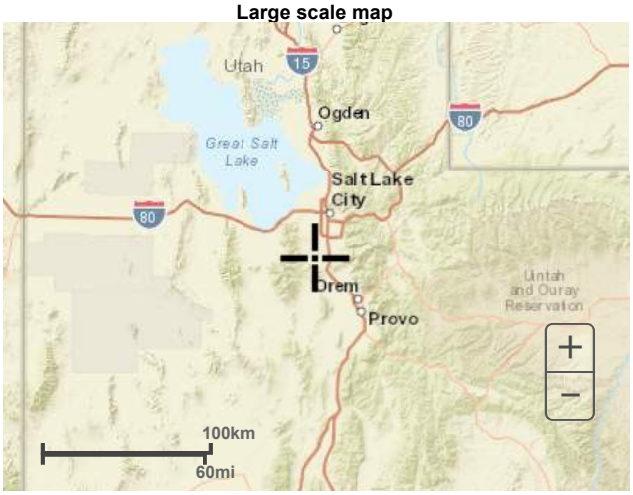

Large scale aerial

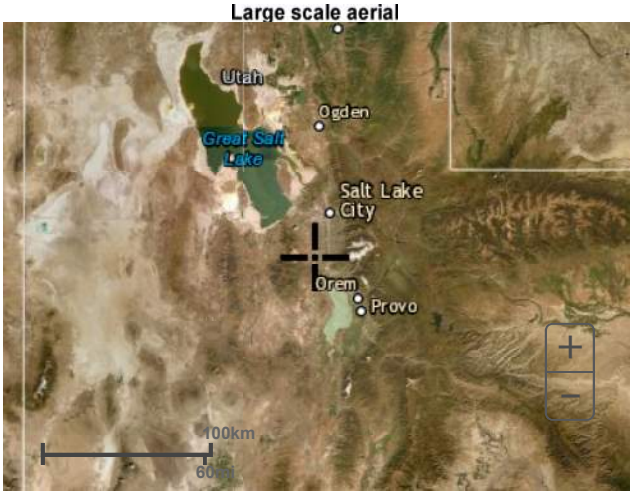

Back to Top

US Department of Commerce
National Oceanic and Atmospheric Administration
National Weather Service
National Water Center
1325 East West Highway
Silver Spring, MD 20910
Questions?: HDSC.Questions@noaa.gov

APPENDIX B

DRAINAGE BASIN DELINEATIONS

AREA DESIGN SUMMARIES

INLET DESIGN SUMMARIES

PIPE DESIGN SUMMARIES

Table 3 Amendment 2019-10-15

Road	District	Area (ac)	Release Rate @ 0.10 cfs/ac (cfs) and Point Discharg	Q	n	Slope (ft/ft)	D	Pipe	Notes: RW runoff coefficient 95%, 10year intensity 2.46in/hr typical
Basin A									(2cfs) Release Western Springs mini pond 12960S 4370W 4570-1, 4570-2, 4570-3, MVV, 13200-1, 13200-2, 13200-3, 13200-4, 13200-5, 13200-1 and road
			2	2.0					Western Springs Pond
4570	4570-1	8.9	0.89	2.9	0.013	0.005	1.05	15	
4570	4570rw-1	0.3	0.80	3.7	0.013	0.005	1.15	15	
4570	4570-2	12.5	1.25	4.9	0.013	0.005	1.29	18	
4570	4570rw-2	0.5	1.21	6.2	0.013	0.005	1.40	18	
4570	4570-3	11.8	1.18	7.3	0.013	0.005	1.49	18	
4570	4570rw-2	0.6	1.38	8.7	0.013	0.005	1.59	24	
13200	13200rw-0	3.0	7.11	15.8	0.013	0.005	1.99	24	Confluence (132rw-0)
			5	20.8					(5 cfs) MVV Estimate point source(13200rw-1)
13202	13200-1	14.69	1.47	22.3	0.013	0.005	2.26	30	
13200	13200rw-1	1.5	3.46	25.8	0.013	0.005	2.39	30	
13202	13200-2	14.1	1.41	27.2	0.013	0.005	2.44	30	
13200	13200rw-2	1.1	2.48	29.6	0.013	0.005	2.52	36	
			6	35.6					(6 cfs)CenterCal Estimate point source(13200rw-3)
13200	13200-3	12.4	1.24	36.9	0.013	0.005	2.73	36	
13200	13200rw-3	0.4	0.89	37.8	0.013	0.005	2.76	36	
			-19	18.8					19cfs Diversion from 13200S System(13200rw-4)
13200	13200-4	13.7	1.37	20.1	0.013	0.005	2.18	30	36" to account for spillway(20cfs)(13200rw-4)
13200	13200rw-4	1.8	4.10	24.2	0.013	0.005	2.34	30	
13200	13200-5	12.4	1.24	25.5	0.013	0.005	2.38	30	
13200	13200rw-5	1.0	2.39	27.9	0.013	0.005	2.46	30	
13200	13200-6	13.8	1.38	29.3	0.013	0.005	2.51	36	
13200	13200rw-6	2.7	6.31	35.6	0.013	0.005	2.70	36	
Basin B									4570-6, 4570-7, and road
4150	4150-6	6.4	0.64	0.6	0.013	0.005	0.60	15	
4150	4150rw-6	1.3	3.04	3.7	0.013	0.005	1.15	15	
4150	4150-7	14.5	1.45	5.1	0.013	0.005	1.30	18	
4150	4150rw-7	1.4	3.27	8.4	0.013	0.005	1.57	24	
Basin C									4570-3, 4570-4, 4570-5, and road
4150	4150-2	4.7	0.47	0.5	0.013	0.005	0.53	15	
4150	4150rw-2	1.6	3.74	4.2	0.013	0.005	1.21	15	
4150	4150-3	11.6	1.16	5.4	0.013	0.005	1.33	18	
4150	4150rw-3	1.2	2.80	8.2	0.013	0.005	1.55	24	
4150	4150-4	18.2	1.82	10.0	0.013	0.005	1.67	24	
4150	4150rw-4	1.3	3.04	13.0	0.013	0.005	1.85	24	
4150	4150-5	20.7	2.07	15.1	0.013	0.005	1.96	24	
4150	4150rw-5	1.6	3.74	18.8	0.013	0.005	2.12	30	
4150	4150rw-6a	1.7	3.88	22.7	0.013	0.005	2.28	30	
Basin D									4570-10N, 4570-11S, (no road)
				35.6					Confluence Basin A
				8.4					Confluence Basin B
				22.7					Confluence Basin C
4150	4150-10N	46.7	4.67	71.4	0.013	0.003	3.85	48	
4150	4150-11S	33.8	3.38	74.7	0.013	0.003	3.92	48	
								42	Existing outfall RCP@0.3%
Basin E									4570-8, 4570-9, and road
			11	11					11cfs From Center Cal and additional diversion(13200rw-4)
4150	4150-8	16	1.60	12.6	0.013	0.005	1.83	24	
4150	4150rw-8	1.5	0.15	12.8	0.013	0.005	1.84	24	
									Existing (2) 19"x30"

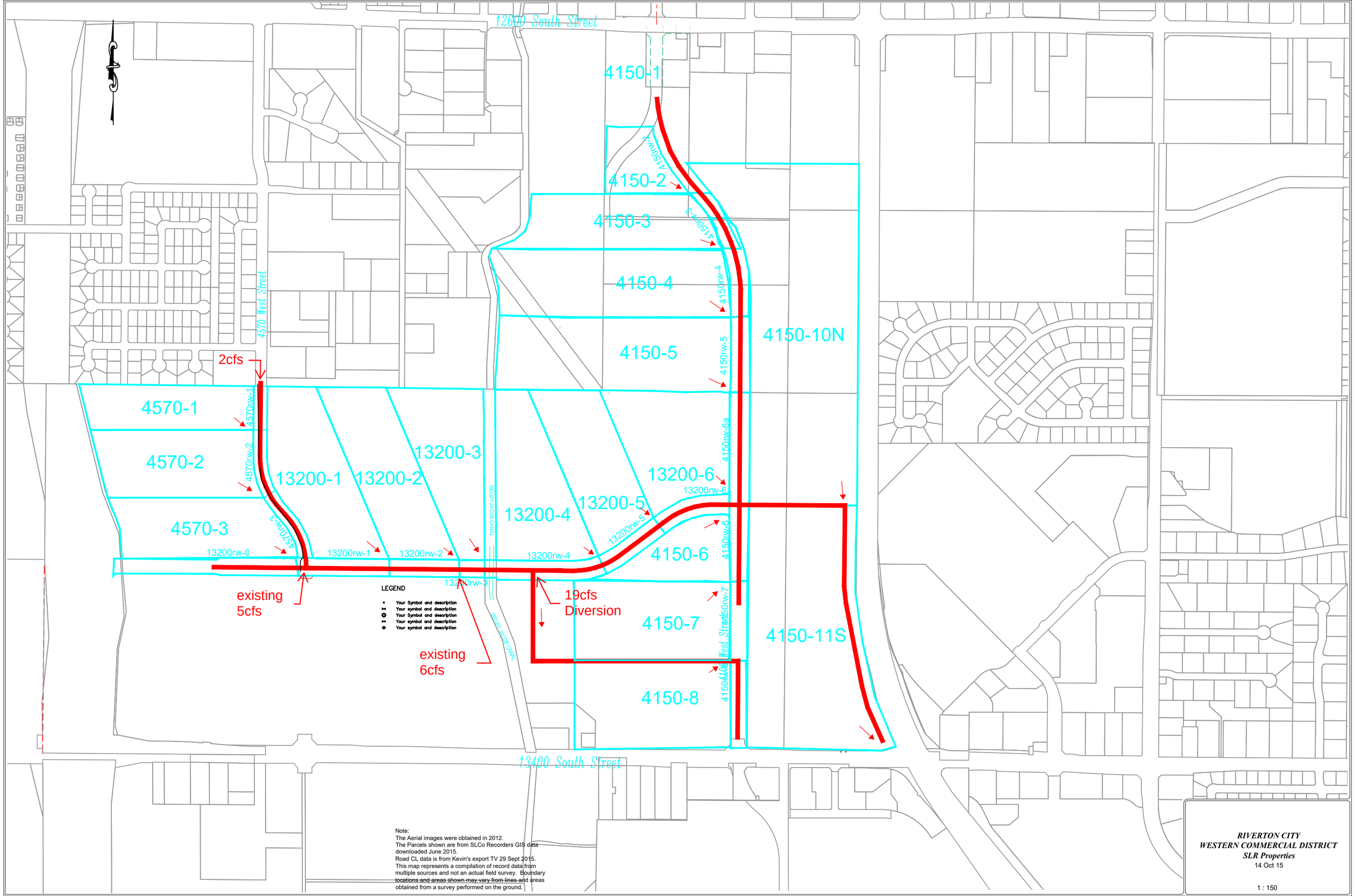

Note:
The Aerial images were obtained in 2012.
The Parcels shown are from SLCo Recorders GIS data downloaded June 2015.
Road CL data is from Kevin's export TV 29 Sept 2015.
This map represents a compilation of record data from multiple sources and not an actual field survey. Boundary locations and areas shown may vary from lines and areas obtained from a survey performed on the ground.

RIVERTON CITY
WESTERN COMMERCIAL DISTRICT
SLR Properties
14 Oct 15

1 : 150

Inlets										
ID	$Flow_{10}$ (cfs)	$Spread_{10}$ (ft)	Allowable Spread (ft)	Tc (min)	Intensity (in/hr)	Elevation (ft)	HGL_{10} (ft)	HGL_{50} (Ft)	Ground to HGL_{50} (ft)	Comments
CB 1-1	0.63	3.43	6.42	5	3.22	4655.71	4651.4	4652.12	3.59	
CB 1-2	0.63	3.61	6.42	5	3.22	4655.7	4651.8	4652.48	3.22	
CB 1-3	Flanking inlet					4655.43	N/A			
CB 1-4	Flanking inlet					4655.43	N/A			
CB 1-5	1.09	2.07	6.42	5	3.22	4655.4	4650.7	4651.5	3.9	
CB 1-6	1.1	2.14	6.42	5	3.22	4655.4	4651.2	4651.95	3.45	
CB 1-7	Flanking inlet					4655.49	N/A			
CB 1-8	Flanking inlet					4655.49	N/A			
CB 2-1	0.87	4.25	6.42	5	3.22	4656.16	4651.5	4652.22	3.94	
CB 2-2	0.87	4.24	6.42	5	3.22	4656.18	4652	4652.69	3.49	
CB 2-3	0.89	4.32	6.42	5	3.22	4657.98	4653.3	4653.28	4.7	
CB 2-4	0.88	4.32	6.42	5	3.22	4657.99	4653.5	4653.48	4.51	
CB 2-5	0.34	1.92	6.42	5	3.22	4660.52	4655.7	4655.76	4.76	
CB 2-6	0.34	1.9	6.42	5	3.22	4660.53	4656	4656.06	4.47	
CB 3-1	0.45	3.28	6.42	5	3.22	4660.36	4655.9	4655.87	4.49	
CB 3-10	0.61	5.41	6.42	5	3.22	4660	4656.9	4657.83	2.17	
CB 3-2	0.45	3.22	6.42	5	3.22	4660.37	4655.7	4655.75	4.62	
CB 3-3	Flanking inlet					4659.63	N/A			
CB 3-4	Flanking inlet					4659.63	N/A			
CB 3-5	1.4	3.87	6.42	5	3.22	4659.59	4656.5	4657.21	2.38	
CB 3-6	1.46	4.18	6.42	5	3.22	4659.59	4656.6	4657.25	2.34	
CB 3-7	Flanking inlet					4659.63	N/A			
CB 3-8	Flanking inlet					4659.62	N/A			
CB 3-9	0.94	5.2	6.42	5	3.22	4660.03	4656.9	4657.82	2.21	
CB 4-1	1.16	4.22	6.42	5	3.22	4662.18	4658.8	4660.63	1.55	
CB 4-2	1.16	4.36	6.42	5	3.22	4662.17	4658.8	4660.58	1.59	
CB 4-3	1.2	3.89	6.42	5	3.22	4667.54	4663.1	4663.75	3.79	
CB 4-4	1.16	3.93	6.42	5	3.22	4667.4	4663.5	4664.17	3.23	
CB 4-5	1.01	4.77	6.42	5	3.22	4671.9	4667.5	4668.18	3.72	
CB 4-6	0.98	4.48	6.42	5	3.22	4671.84	4667.9	4668.55	3.29	
CB 5-1	0.92	5.42	6.42	5	3.22	4672.3	4668.1	4668.07	4.23	
CB 5-2	0.89	5.23	6.42	5	3.22	4672.3	4668.4	4668.61	3.69	
CB 5-3	Flanking inlet					4671.75	N/A			
CB 5-4	Flanking inlet					4671.76	N/A			
CB 5-5	1.35	3.59	9.42	5	3.22	4671.72	4667.5	4668.97	2.75	Major Sag, 8.78 ft spread in 50 year event
CB 5-6	1.33	3.48	9.42	5	3.22	4671.72	4667.9	4668.99	2.73	Major Sag, 8.63 ft spread in 50 year event
CB 6-1	Flanking inlet					4671.78	N/A			
CB 6-2	Flanking inlet					4671.78	N/A			
CB 6-3	Unknown					4674.77	N/A			

Pipes							
Pipe ID	Diameter (in)	$Flow_{10}$ (cfs)	$Velocity_{10}$ (fps)	$Status_{10}$	$Flow_{50}$ (cfs)	$Velocity_{50}$ (fps)	$Status_{50}$
P 1-1	30	19.7	6.64	Partial	28.26	5.76	Full
P 1-2	30	20.03	6.65	Partial	28.76	5.86	Full
P 1-3	18	1.15	4.98	Partial	1.29	5.16	Partial
P 1-4	18	0.5	3.87	Partial	0.65	4.19	Partial
P 1-5	30	18.86	6.57	Partial	27.43	5.59	Full
P 1-6	18	FLANKER					
P 1-7	18	FLANKER					
P 1-8	18	1.09	4.9	Partial	2.34	6.12	Partial
P 1-9	18	1.11	4.9	Partial	2.35	6.12	Partial
P 1-10	18	FLANKER					
P 1-11	30	17.53	6.45	Partial	24.43	6.93	Partial
P 1-12	18	FLANKER					
P 2-1	18	0.62	4.14	Partial	0.88	4.6	Partial
P 2-2	18	0.62	4.13	Partial	0.88	4.58	Partial
P 2-3	30	16.91	6.4	Partial	23.53	6.89	Partial
P 2-4	18	2.69	6.37	Partial	2.9	6.51	Partial
P 2-5	18	0.62	4.15	Partial	0.83	4.52	Partial
P 2-6	30	14.29	6.14	Partial	20.72	6.71	Partial
P 2-7	18	0.33	3.4	Partial	0.45	3.74	Partial
P 2-8	18	0.33	3.41	Partial	0.45	3.76	Partial
P 2-9	30	14.09	5.97	Partial	20.47	6.53	Partial
P 3-1	18	2.21	6.02	Partial	2.3	6.1	Partial
P 3-2	18	0.39	3.59	Partial	0.48	3.81	Partial
P 3-3	24	11.9	5.67	Partial	18.25	5.81	Full
P 3-4	18	FLANKER					
P 3-5	18	FLANKER					
P 3-6	18	1.4	0.79	Full	3.07	1.74	Full
P 3-7	18	1.46	0.82	Full	3.15	1.78	Full
P 3-8	18	FLANKER					
P 3-9	24	9.87	3.14	Full	13.76	4.38	Full
P 3-10	18	FLANKER					
P 3-11	18	0.62	0.35	Full	1.04	0.59	Full
P 3-12	18	0.63	0.36	Full	1.06	0.6	Full
P 3-13	18	9.11	5.16	Full	12.4	7.02	Full
P 4-1	18	1.96	1.11	Full	2.28	1.29	Full
P 4-2	18	0.79	0.45	Full	1.12	0.63	Full
P 4-3	18	6.98	5.63	Partial	9.85	5.58	Full
P 4-4	18	0.86	4.55	Partial	1.1	4.91	Partial
P 4-5	18	0.83	4.49	Partial	1.07	4.89	Partial
P 4-6	18	5.83	5.42	Partial	8.36	4.73	Full
P 4-7	18	1.14	4.96	Partial	1.34	5.19	Partial
P 4-8	18	0.67	4.24	Partial	0.86	4.58	Partial
P 4-9	18	4.35	5.05	Partial	6.59	3.73	Full
P 5-1	18	4.48	5.09	Partial	6.77	3.83	Full
P 5-2	18	4.61	5.12	Partial	6.97	3.94	Full
P 5-3	18	1.49	5.37	Partial	1.7	5.59	Partial
P 5-4	18	0.59	4.06	Partial	0.79	0.45	Full
P 5-5	18	2.65	4.43	Partial	4.63	2.62	Full
P 5-6	18	FLANKER					
P 5-7	18	FLANKER					
P 5-8	18	1.35	4.08	Partial	2.36	1.33	Full
P 5-9	18	1.33	4.07	Partial	2.32	1.32	Full
P 5-10	18	FLANKER					
P 5-11	18	FLANKER					

APPENDIX C

INROADS STORM AND SANITARY 10-YEAR MODEL OUTPUTS

Design Log

```
=====================================================================
InRoads Storm & Sanitary Design Log

Drainage File:  pw:\\pw.horrocks.com:PWPrimary\Documents\Projects\2019\UT-1926-1909
4150 W Majestic Rise Prkwy to 12600 S\15913\Design\Civil_Data\Drainage\15913_SDB

Design File:  pw:\\pw.horrocks.com:PWPrimary\Documents\Projects\2019\UT-1926-1909
4150 W Majestic Rise Prkwy to 12600 S\15913\Design\Working\KDK\15913_KDK Working.dgn

Display Log:  c:\pw_work\kirk.kauer\d0222262\design.log

Date:  Thursday, November 14, 2019 1:42:32 PM
=====================================================================

Designing inlet CB 6-2
   No surface runoff to inlet
   No flow found upstream
Designing pipe P 5-11
   No flow in structure
Designing inlet CB 5-4
   No surface runoff to inlet
   No flow found upstream
Designing pipe P 5-7
   No flow in structure
Designing inlet CB 5-6

  Results:
        Gutter Flow:     1.3329 cfs               Flow From:       Area
***NOTE: Gutter flow from the downstream bypass is determined from the downstream
inlet's basin flow.***
***      It does not include any flow bypassed to the downstream inlet.
                ***
    Time of Concentration ENABLED
                 Tc:     5.0000 min               Intensity:     3.2200 in/h
       Sum C x Area:     0.4140 ac          Ave Runoff Coef:     0.9000

             Status:      Fixed
       Inlet Length:     2.7500 ft              Inlet Width:     1.2900 ft
    Flow Downstream:     1.3329 cfs
        Percent Cap:   100.0000 %                  Capacity:     1.3334 cfs
             Spread:     3.4800 ft
    Depth in Gutter:     0.2296 ft          Assigned Bypass:        N/A


Designing pipe P 5-9

  Results:
```

```
         Total Flow:     1.3329 cfs               Flow From:   Upstream

    Time of Concentration ENABLED
                Tc:     5.2623 min               Intensity:     3.2200 in/h
       Sum C x Area:     0.4140 ac          Ave Runoff Coef:     0.0000

             Status:      Fixed                      Slope:     0.0100 ft/ft
         Pipe Width:    18.0000 in              Pipe Height:    18.0000 in
      Depth of Flow:     0.3600 ft              Flow Status:    Partial
     Critical Depth:     0.4300 ft                 Capacity:    10.5043 cfs
           Velocity:     4.0711 ft/s
      Froude Number:     1.4226                 Flow Regime: SuperCritical


Designing inlet CB 6-1
   No surface runoff to inlet
   No flow found upstream
Designing pipe P 5-10
   No flow in structure
Designing inlet CB 5-3
   No surface runoff to inlet
   No flow found upstream
Designing pipe P 5-6
   No flow in structure
Designing inlet CB 5-5

  Results:
        Gutter Flow:     1.3522 cfs               Flow From:       Area
***NOTE: Gutter flow from the downstream bypass is determined from the downstream
inlet's basin flow.***
***      It does not include any flow bypassed to the downstream inlet.
                ***
    Time of Concentration ENABLED
                Tc:     5.0000 min               Intensity:     3.2200 in/h
       Sum C x Area:     0.4199 ac          Ave Runoff Coef:     0.9000

             Status:      Fixed
       Inlet Length:     2.7500 ft              Inlet Width:     1.2900 ft
    Flow Downstream:     1.3522 cfs
        Percent Cap:   100.0000 %                  Capacity:     1.3526 cfs
             Spread:     3.5900 ft
    Depth in Gutter:     0.2318 ft          Assigned Bypass:        N/A


Designing pipe P 5-8

  Results:
         Total Flow:     1.3522 cfs               Flow From:   Upstream

    Time of Concentration ENABLED
```

```
                Tc:     5.0895 min              Intensity:     3.2200 in/h
      Sum C x Area:     0.4199 ac          Ave Runoff Coef:     0.0000

            Status:      Fixed                      Slope:     0.0100 ft/ft
        Pipe Width:    18.0000 in             Pipe Height:    18.0000 in
     Depth of Flow:     0.3630 ft             Flow Status:    Partial
    Critical Depth:     0.4300 ft                Capacity:    10.5043 cfs
          Velocity:     4.0821 ft/s
     Froude Number:     1.4201                Flow Regime: SuperCritical


Designing manhole MH 5-4

  Results:
        Total Flow:     2.6515 cfs              Flow From:   Upstream

    Time of Concentration ENABLED
                Tc:     5.2623 min           Sum C x Area:     0.8339 ac

            Status:      Fixed
     Chamber Width:     4.0000 ft          Chamber Length:     4.0000 ft


Designing pipe P 5-5

  Results:
        Total Flow:     2.6515 cfs              Flow From:   Upstream

    Time of Concentration ENABLED
                Tc:     5.7955 min              Intensity:     3.1796 in/h
      Sum C x Area:     0.8339 ac          Ave Runoff Coef:     0.0000

            Status:      Fixed                      Slope:     0.0074 ft/ft
        Pipe Width:    18.0000 in             Pipe Height:    18.0000 in
     Depth of Flow:     0.5570 ft             Flow Status:    Partial
    Critical Depth:     0.6100 ft                Capacity:     9.0097 cfs
          Velocity:     4.4283 ft/s
     Froude Number:     1.2162                Flow Regime: SuperCritical


Designing pipe Future connection 6

  Results:
        Total Flow:     0.8900 cfs              Flow From: Injected Storm

            Status:      Fixed                      Slope:     0.0100 ft/ft
        Pipe Width:    18.0000 in             Pipe Height:    18.0000 in
     Depth of Flow:     0.2950 ft             Flow Status:    Partial
    Critical Depth:     0.3500 ft                Capacity:    10.5043 cfs
          Velocity:     3.6059 ft/s
```

```
      Froude Number:     1.4007                 Flow Regime: SuperCritical


Designing inlet CB 5-1

  Results:
        Gutter Flow:     0.9183 cfs               Flow From:       Area

    Time of Concentration ENABLED
                 Tc:     5.0000 min               Intensity:     3.2200 in/h
       Sum C x Area:     0.1856 ac          Ave Runoff Coef:     0.9000

             Status:      Fixed
       Inlet Length:     2.7500 ft              Inlet Width:     1.2900 ft
    Flow Downstream:     1.4876 cfs               Bypass To:     0.3207 cfs
        Percent Cap:    65.0774 %                 Capacity:     0.5976 cfs
             Spread:     5.4208 ft
    Depth in Gutter:     0.2684 ft          Assigned Bypass:     CB 5-5


Designing pipe P 5-3

  Results:
         Total Flow:     1.4876 cfs               Flow From:   Upstream

    Time of Concentration ENABLED
                 Tc:     5.0677 min               Intensity:     3.2200 in/h
       Sum C x Area:     0.1856 ac          Ave Runoff Coef:     0.0000

             Status:      Fixed                      Slope:     0.0200 ft/ft
         Pipe Width:    18.0000 in              Pipe Height:    18.0000 in
      Depth of Flow:     0.3200 ft              Flow Status:    Partial
     Critical Depth:     0.4500 ft                 Capacity:    14.8554 cfs
           Velocity:     5.3680 ft/s
      Froude Number:     1.9974                 Flow Regime: SuperCritical


Designing inlet CB 5-2

  Results:
        Gutter Flow:     0.8855 cfs               Flow From:       Area

    Time of Concentration ENABLED
                 Tc:     5.0000 min               Intensity:     3.2200 in/h
       Sum C x Area:     0.1819 ac          Ave Runoff Coef:     0.9000

             Status:      Fixed
       Inlet Length:     2.7500 ft              Inlet Width:     1.2900 ft
    Flow Downstream:     0.5859 cfs               Bypass To:     0.2996 cfs
        Percent Cap:    66.1643 %                 Capacity:     0.5859 cfs
```

```
            Spread:     5.2277 ft
    Depth in Gutter:     0.2646 ft          Assigned Bypass:     CB 5-6


Designing pipe P 5-4

  Results:
         Total Flow:     0.5859 cfs               Flow From:   Upstream

    Time of Concentration ENABLED
                Tc:     5.2633 min               Intensity:     3.2200 in/h
       Sum C x Area:     0.1819 ac          Ave Runoff Coef:     0.0000

            Status:      Fixed                      Slope:     0.0200 ft/ft
         Pipe Width:    18.0000 in              Pipe Height:    18.0000 in
      Depth of Flow:     0.2030 ft              Flow Status:    Partial
     Critical Depth:     0.2800 ft                 Capacity:    14.8554 cfs
           Velocity:     4.0638 ft/s
      Froude Number:     1.9183                 Flow Regime: SuperCritical


Designing manhole MH 5-3

  Results:
         Total Flow:     4.6114 cfs               Flow From:   Upstream

    Time of Concentration ENABLED
                Tc:     5.7955 min            Sum C x Area:     1.2014 ac

            Status:      Fixed
      Chamber Width:     4.0000 ft           Chamber Length:     4.0000 ft


Designing pipe P 5-2

  Results:
         Total Flow:     4.6114 cfs               Flow From:   Upstream

    Time of Concentration ENABLED
                Tc:     6.5260 min               Intensity:     3.0975 in/h
       Sum C x Area:     1.2014 ac          Ave Runoff Coef:     0.0000

            Status:      Fixed                      Slope:     0.0074 ft/ft
         Pipe Width:    18.0000 in              Pipe Height:    18.0000 in
      Depth of Flow:     0.7600 ft              Flow Status:    Partial
     Critical Depth:     0.8200 ft                 Capacity:     9.0105 cfs
           Velocity:     5.1234 ft/s
      Froude Number:     1.1670                 Flow Regime: SuperCritical
```

Designing manhole MH 5-2

Results:

Total Flow:	4.4763 cfs	Flow From:	Upstream

Time of Concentration ENABLED

Tc:	6.5260 min	Sum C x Area:	1.2014 ac
Status:	Fixed		
Chamber Width:	4.0000 ft	Chamber Length:	4.0000 ft

Designing pipe P 5-1

Results:

Total Flow:	4.4763 cfs	Flow From:	Upstream

Time of Concentration ENABLED

Tc:	7.1877 min	Intensity:	2.9850 in/h
Sum C x Area:	1.2014 ac	Ave Runoff Coef:	0.0000
Status:	Fixed	Slope:	0.0074 ft/ft
Pipe Width:	18.0000 in	Pipe Height:	18.0000 in
Depth of Flow:	0.7460 ft	Flow Status:	Partial
Critical Depth:	0.8100 ft	Capacity:	9.0152 cfs
Velocity:	5.0921 ft/s		
Froude Number:	1.1737	Flow Regime:	SuperCritical

Designing manhole MH 5-1

Results:

Total Flow:	4.3539 cfs	Flow From:	Upstream

Time of Concentration ENABLED

Tc:	7.1877 min	Sum C x Area:	1.2014 ac
Status:	Fixed		
Chamber Width:	4.0000 ft	Chamber Length:	4.0000 ft

Designing pipe P 4-9

Results:

Total Flow:	4.3539 cfs	Flow From:	Upstream

Time of Concentration ENABLED

Tc:	7.9333 min	Intensity:	2.8831 in/h
Sum C x Area:	1.2014 ac	Ave Runoff Coef:	0.0000

```
            Status:      Fixed                      Slope:     0.0074 ft/ft
        Pipe Width:    18.0000 in              Pipe Height:    18.0000 in
      Depth of Flow:     0.7350 ft              Flow Status:    Partial
     Critical Depth:     0.8000 ft                 Capacity:     9.0084 cfs
           Velocity:     5.0475 ft/s
      Froude Number:     1.1744                 Flow Regime: SuperCritical


Designing pipe Future connection 5

  Results:
        Total Flow:     0.4700 cfs               Flow From: Injected Storm

            Status:      Fixed                      Slope:     0.0100 ft/ft
        Pipe Width:    18.0000 in              Pipe Height:    18.0000 in
      Depth of Flow:     0.2160 ft              Flow Status:    Partial
     Critical Depth:     0.2500 ft                 Capacity:    10.5043 cfs
           Velocity:     2.9801 ft/s
      Froude Number:     1.3623                 Flow Regime: SuperCritical


Designing inlet CB 4-5

  Results:
       Gutter Flow:     1.0066 cfs               Flow From:       Area

    Time of Concentration ENABLED
                 Tc:     5.0000 min               Intensity:     3.2200 in/h
      Sum C x Area:     0.2069 ac          Ave Runoff Coef:     0.9000

            Status:      Fixed
       Inlet Length:     2.7500 ft              Inlet Width:     1.2900 ft
    Flow Downstream:     1.1362 cfs               Bypass To:     0.3404 cfs
        Percent Cap:    66.1798 %                 Capacity:     0.6662 cfs
            Spread:     4.7671 ft
    Depth in Gutter:     0.2553 ft          Assigned Bypass:     CB 4-3


Designing pipe P 4-7

  Results:
        Total Flow:     1.1362 cfs               Flow From:   Upstream

    Time of Concentration ENABLED
                 Tc:     5.0740 min               Intensity:     3.2200 in/h
      Sum C x Area:     0.2069 ac          Ave Runoff Coef:     0.0000

            Status:      Fixed                      Slope:     0.0200 ft/ft
        Pipe Width:    18.0000 in              Pipe Height:    18.0000 in
      Depth of Flow:     0.2800 ft              Flow Status:    Partial
```

```
     Critical Depth:     0.3900 ft                Capacity:    14.8554 cfs
           Velocity:     4.9597 ft/s
      Froude Number:     1.9802                 Flow Regime: SuperCritical


Designing inlet CB 4-6

  Results:
        Gutter Flow:     0.9810 cfs               Flow From:       Area

    Time of Concentration ENABLED
                 Tc:     5.0000 min               Intensity:     3.2200 in/h
       Sum C x Area:     0.2078 ac          Ave Runoff Coef:     0.9000

             Status:      Fixed
       Inlet Length:     2.7500 ft              Inlet Width:     1.2900 ft
    Flow Downstream:     0.6690 cfs               Bypass To:     0.3120 cfs
        Percent Cap:    68.1927 %                 Capacity:     0.6690 cfs
             Spread:     4.4772 ft
    Depth in Gutter:     0.2495 ft          Assigned Bypass:     CB 4-4


Designing pipe P 4-8

  Results:
        Total Flow:     0.6690 cfs               Flow From:   Upstream

    Time of Concentration ENABLED
                 Tc:     5.2524 min               Intensity:     3.2200 in/h
       Sum C x Area:     0.2078 ac          Ave Runoff Coef:     0.0000

             Status:      Fixed                      Slope:     0.0200 ft/ft
        Pipe Width:    18.0000 in              Pipe Height:    18.0000 in
      Depth of Flow:     0.2160 ft              Flow Status:    Partial
     Critical Depth:     0.3000 ft                Capacity:    14.8554 cfs
           Velocity:     4.2418 ft/s
      Froude Number:     1.9391                 Flow Regime: SuperCritical


Designing manhole MH 4-3

  Results:
        Total Flow:     5.8338 cfs               Flow From:   Upstream

    Time of Concentration ENABLED
                 Tc:     7.9333 min            Sum C x Area:     1.6161 ac

             Status:      Fixed
      Chamber Width:     4.0000 ft           Chamber Length:     4.0000 ft
```

Designing pipe P 4-6

```
  Results:
        Total Flow:     5.8338 cfs              Flow From:   Upstream

    Time of Concentration ENABLED
                 Tc:     8.8432 min              Intensity:     2.7683 in/h
       Sum C x Area:     1.6161 ac          Ave Runoff Coef:     0.0000

             Status:      Fixed                      Slope:     0.0074 ft/ft
         Pipe Width:    18.0000 in              Pipe Height:    18.0000 in
      Depth of Flow:     0.8780 ft              Flow Status:    Partial
     Critical Depth:     0.9300 ft                 Capacity:     9.0093 cfs
           Velocity:     5.4211 ft/s
      Froude Number:     1.1208                 Flow Regime: SuperCritical
```

Designing inlet CB 4-3

```
  Results:
        Gutter Flow:     1.1961 cfs              Flow From:       Area
***NOTE: Gutter flow from the downstream bypass is determined from the downstream
inlet's basin flow.***
***      It does not include any flow bypassed to the downstream inlet.
                ***
    Time of Concentration ENABLED
                 Tc:     5.0000 min              Intensity:     3.2200 in/h
       Sum C x Area:     0.2658 ac          Ave Runoff Coef:     0.9000

             Status:      Fixed
       Inlet Length:     2.7500 ft              Inlet Width:     1.2900 ft
    Flow Downstream:     0.8558 cfs              Bypass To:     0.3403 cfs
        Percent Cap:    71.5487 %                 Capacity:     0.8558 cfs
             Spread:     3.8864 ft
    Depth in Gutter:     0.2378 ft          Assigned Bypass:     CB 4-1
```

Designing pipe P 4-4

```
  Results:
        Total Flow:     0.8558 cfs              Flow From:   Upstream

    Time of Concentration ENABLED
                 Tc:     5.0804 min              Intensity:     3.2200 in/h
       Sum C x Area:     0.2658 ac          Ave Runoff Coef:     0.0000

             Status:      Fixed                      Slope:     0.0200 ft/ft
         Pipe Width:    18.0000 in              Pipe Height:    18.0000 in
      Depth of Flow:     0.2440 ft              Flow Status:    Partial
```

```
     Critical Depth:     0.3400 ft                 Capacity:    14.8554 cfs
           Velocity:     4.5515 ft/s
      Froude Number:     1.9529                 Flow Regime: SuperCritical


Designing inlet CB 4-4

  Results:
        Gutter Flow:     1.1575 cfs               Flow From:       Area
***NOTE: Gutter flow from the downstream bypass is determined from the downstream
inlet's basin flow.***
***      It does not include any flow bypassed to the downstream inlet.
                ***
    Time of Concentration ENABLED
                 Tc:     5.0000 min               Intensity:     3.2200 in/h
       Sum C x Area:     0.2563 ac          Ave Runoff Coef:     0.9000

             Status:      Fixed
       Inlet Length:     2.7500 ft              Inlet Width:     1.2900 ft
    Flow Downstream:     0.8252 cfs               Bypass To:     0.3323 cfs
        Percent Cap:    71.2894 %                 Capacity:     0.8252 cfs
             Spread:     3.9317 ft
    Depth in Gutter:     0.2386 ft          Assigned Bypass:     CB 4-2


Designing pipe P 4-5

  Results:
         Total Flow:     0.8252 cfs               Flow From:   Upstream

    Time of Concentration ENABLED
                 Tc:     5.2386 min               Intensity:     3.2200 in/h
       Sum C x Area:     0.2563 ac          Ave Runoff Coef:     0.0000

             Status:      Fixed                      Slope:     0.0200 ft/ft
         Pipe Width:    18.0000 in              Pipe Height:    18.0000 in
      Depth of Flow:     0.2400 ft              Flow Status:    Partial
     Critical Depth:     0.3300 ft                 Capacity:    14.8554 cfs
           Velocity:     4.4945 ft/s
      Froude Number:     1.9451                 Flow Regime: SuperCritical


Designing manhole MH 4-2

  Results:
         Total Flow:     6.9793 cfs               Flow From:   Upstream

    Time of Concentration ENABLED
                 Tc:     8.8432 min            Sum C x Area:     2.1381 ac
```

```
            Status:      Fixed
      Chamber Width:     5.0000 ft           Chamber Length:     5.0000 ft


Designing pipe P 4-3

  Results:
        Total Flow:     6.9793 cfs               Flow From:   Upstream

    Time of Concentration ENABLED
                Tc:     9.6375 min               Intensity:     2.6282 in/h
       Sum C x Area:     2.1381 ac          Ave Runoff Coef:     0.0000

            Status:      Fixed                      Slope:     0.0074 ft/ft
        Pipe Width:    18.0000 in              Pipe Height:    18.0000 in
      Depth of Flow:     0.9910 ft              Flow Status:    Partial
     Critical Depth:     1.0200 ft                Capacity:     9.0103 cfs
          Velocity:     5.6277 ft/s
      Froude Number:     1.0624                 Flow Regime: SuperCritical


Designing pipe Future connection 4

  Results:
        Total Flow:     1.1600 cfs               Flow From: Injected Storm

            Status:      Fixed                      Slope:     0.0100 ft/ft
        Pipe Width:    18.0000 in              Pipe Height:    18.0000 in
      Depth of Flow:     0.3360 ft              Flow Status:    Partial
     Critical Depth:     0.4000 ft                Capacity:    10.5043 cfs
          Velocity:     3.9059 ft/s
      Froude Number:     1.4161                 Flow Regime: SuperCritical


Designing inlet CB 4-1

  Results:
       Gutter Flow:     1.1604 cfs               Flow From:       Area
***NOTE: Gutter flow from the downstream bypass is determined from the downstream
inlet's basin flow.***
***      It does not include any flow bypassed to the downstream inlet.
                ***
    Time of Concentration ENABLED
                Tc:     5.0000 min               Intensity:     3.2200 in/h
       Sum C x Area:     0.2474 ac          Ave Runoff Coef:     0.9000

            Status:      Fixed
       Inlet Length:     2.7500 ft              Inlet Width:     1.2900 ft
    Flow Downstream:     1.9565 cfs               Bypass To:     0.3639 cfs
        Percent Cap:    68.6395 %                 Capacity:     0.7965 cfs
```

```
            Spread:     4.2202 ft
    Depth in Gutter:     0.2443 ft          Assigned Bypass:     CB 3-9


Designing pipe P 4-1

  Results:
        Total Flow:     1.9565 cfs               Flow From:   Upstream

    Time of Concentration ENABLED
                Tc:     5.0624 min               Intensity:     3.2200 in/h
       Sum C x Area:     0.2474 ac          Ave Runoff Coef:     0.0000

            Status:      Fixed                      Slope:     0.0200 ft/ft
         Pipe Width:    18.0000 in              Pipe Height:    18.0000 in
      Depth of Flow:     0.3670 ft              Flow Status:    Partial
     Critical Depth:     0.5200 ft                Capacity:    14.8554 cfs
           Velocity:     5.8157 ft/s
      Froude Number:     2.0113                 Flow Regime: SuperCritical


Designing inlet CB 4-2

  Results:
        Gutter Flow:     1.1670 cfs               Flow From:       Area
***NOTE: Gutter flow from the downstream bypass is determined from the downstream
inlet's basin flow.***
***      It does not include any flow bypassed to the downstream inlet.
                ***
    Time of Concentration ENABLED
                Tc:     5.0000 min               Intensity:     3.2200 in/h
       Sum C x Area:     0.2443 ac          Ave Runoff Coef:     0.9000

            Status:      Fixed
       Inlet Length:     2.7500 ft              Inlet Width:     1.2900 ft
    Flow Downstream:     0.7867 cfs               Bypass To:     0.3803 cfs
        Percent Cap:    67.4127 %                 Capacity:     0.7867 cfs
            Spread:     4.3642 ft
    Depth in Gutter:     0.2473 ft          Assigned Bypass:    CB 3-10


Designing pipe P 4-2

  Results:
        Total Flow:     0.7867 cfs               Flow From:   Upstream

    Time of Concentration ENABLED
                Tc:     5.2727 min               Intensity:     3.2200 in/h
       Sum C x Area:     0.2443 ac          Ave Runoff Coef:     0.0000
```

```
            Status:      Fixed                      Slope:     0.0141 ft/ft
        Pipe Width:    18.0000 in              Pipe Height:    18.0000 in
      Depth of Flow:     0.2550 ft              Flow Status:    Partial
     Critical Depth:     0.3200 ft                 Capacity:    12.4912 cfs
           Velocity:     3.9271 ft/s
      Froude Number:     1.6467                 Flow Regime: SuperCritical


Designing manhole MH 4-1

  Results:
        Total Flow:     9.1098 cfs               Flow From:   Upstream

    Time of Concentration ENABLED
                 Tc:     9.6375 min            Sum C x Area:     2.6298 ac

            Status:      Fixed
      Chamber Width:     5.0000 ft           Chamber Length:     5.0000 ft


Designing pipe P 3-13

  Results:
        Total Flow:     9.1098 cfs               Flow From:   Upstream

    Time of Concentration ENABLED
                 Tc:    10.1740 min               Intensity:     2.5058 in/h
       Sum C x Area:     2.6298 ac          Ave Runoff Coef:     0.0000

            Status:      Fixed                      Slope:     0.0074 ft/ft
        Pipe Width:    18.0000 in              Pipe Height:    18.0000 in
      Depth of Flow:     1.2440 ft              Flow Status:    Partial
     Critical Depth:     1.1600 ft                 Capacity:     9.0121 cfs
           Velocity:     5.8101 ft/s
      Froude Number:     0.8694                 Flow Regime: Subcritical


Designing inlet CB 3-9

  Results:
        Gutter Flow:     0.9484 cfs               Flow From:       Area
***NOTE: Gutter flow from the downstream bypass is determined from the downstream
inlet's basin flow.***
***      It does not include any flow bypassed to the downstream inlet.
                ***
    Time of Concentration ENABLED
                 Tc:     5.0000 min               Intensity:     3.2200 in/h
       Sum C x Area:     0.1918 ac          Ave Runoff Coef:     0.9000

            Status:      Fixed
```

```
       Inlet Length:     2.7500 ft              Inlet Width:     1.2900 ft
    Flow Downstream:     0.6177 cfs               Bypass To:     0.3307 cfs
        Percent Cap:    65.1318 %                  Capacity:     0.6177 cfs
             Spread:     5.2020 ft
    Depth in Gutter:     0.2640 ft          Assigned Bypass:     CB 3-5


Designing pipe P 3-11

  Results:
         Total Flow:     0.6177 cfs               Flow From:   Upstream

    Time of Concentration ENABLED
                 Tc:     5.0875 min               Intensity:     3.2200 in/h
       Sum C x Area:     0.1918 ac          Ave Runoff Coef:     0.0000

             Status:      Fixed                      Slope:     0.0200 ft/ft
         Pipe Width:    18.0000 in              Pipe Height:    18.0000 in
      Depth of Flow:     0.2080 ft              Flow Status:    Partial
     Critical Depth:     0.2900 ft                 Capacity:    14.8554 cfs
           Velocity:     4.1364 ft/s
      Froude Number:     1.9282                 Flow Regime: SuperCritical


Designing inlet CB 3-10

  Results:
        Gutter Flow:     0.9875 cfs               Flow From:       Area
***NOTE: Gutter flow from the downstream bypass is determined from the downstream
inlet's basin flow.***
***      It does not include any flow bypassed to the downstream inlet.
                ***
    Time of Concentration ENABLED
                 Tc:     5.0000 min               Intensity:     3.2200 in/h
       Sum C x Area:     0.1959 ac          Ave Runoff Coef:     0.9000

             Status:      Fixed
       Inlet Length:     2.7500 ft              Inlet Width:     1.2900 ft
    Flow Downstream:     0.6308 cfs               Bypass To:     0.3567 cfs
        Percent Cap:    63.8744 %                  Capacity:     0.6308 cfs
             Spread:     5.4113 ft
    Depth in Gutter:     0.2682 ft          Assigned Bypass:     CB 3-6


Designing pipe P 3-12

  Results:
         Total Flow:     0.6308 cfs               Flow From:   Upstream

    Time of Concentration ENABLED
```

```
                Tc:     5.2918 min              Intensity:     3.2200 in/h
      Sum C x Area:     0.1959 ac          Ave Runoff Coef:     0.0000

            Status:      Fixed                      Slope:     0.0141 ft/ft
        Pipe Width:    18.0000 in              Pipe Height:    18.0000 in
     Depth of Flow:     0.2290 ft              Flow Status:    Partial
    Critical Depth:     0.2900 ft                 Capacity:    12.4707 cfs
          Velocity:     3.6758 ft/s
     Froude Number:     1.6302                 Flow Regime: SuperCritical


Designing manhole MH 3-3

  Results:
        Total Flow:     9.8678 cfs               Flow From:   Upstream

    Time of Concentration ENABLED
                Tc:    10.1740 min            Sum C x Area:     3.0175 ac

            Status:      Fixed
     Chamber Width:     5.0000 ft           Chamber Length:     5.0000 ft


Designing pipe P 3-9

  Results:
        Total Flow:     9.8678 cfs               Flow From:   Upstream

    Time of Concentration ENABLED
                Tc:    10.5677 min              Intensity:     2.4350 in/h
      Sum C x Area:     3.0175 ac          Ave Runoff Coef:     0.0000

            Status:      Fixed                      Slope:     0.0052 ft/ft
        Pipe Width:    24.0000 in              Pipe Height:    24.0000 in
     Depth of Flow:     1.1200 ft              Flow Status:    Partial
    Critical Depth:     1.1200 ft                 Capacity:    16.3444 cfs
          Velocity:     5.4452 ft/s
     Froude Number:     1.0054                 Flow Regime:   Critical


Designing inlet CB 3-7
   No surface runoff to inlet
   No flow found upstream
Designing pipe P 3-8
   No flow in structure
Designing inlet CB 3-3
   No surface runoff to inlet
   No flow found upstream
Designing pipe P 3-4
   No flow in structure
```

```
Designing inlet CB 3-5

  Results:
        Gutter Flow:     1.4007 cfs               Flow From:       Area
***NOTE: Gutter flow from the downstream bypass is determined from the downstream
inlet's basin flow.***
***      It does not include any flow bypassed to the downstream inlet.
                ***
    Time of Concentration ENABLED
                 Tc:     5.0000 min               Intensity:     3.2200 in/h
       Sum C x Area:     0.4350 ac          Ave Runoff Coef:     0.9000

             Status:      Fixed
       Inlet Length:     2.7500 ft              Inlet Width:     1.2900 ft
    Flow Downstream:     1.4007 cfs
        Percent Cap:   100.0000 %                  Capacity:     1.4010 cfs
             Spread:     3.8650 ft
    Depth in Gutter:     0.2373 ft          Assigned Bypass:        N/A


Designing pipe P 3-6

  Results:
         Total Flow:     1.4007 cfs               Flow From:   Upstream

    Time of Concentration ENABLED
                 Tc:     5.0682 min               Intensity:     3.2200 in/h
       Sum C x Area:     0.4350 ac          Ave Runoff Coef:     0.0000

             Status:      Fixed                      Slope:     0.0200 ft/ft
         Pipe Width:    18.0000 in              Pipe Height:    18.0000 in
      Depth of Flow:     0.3110 ft              Flow Status:    Partial
     Critical Depth:     0.4400 ft                 Capacity:    14.8554 cfs
           Velocity:     5.2635 ft/s
      Froude Number:     1.9883                 Flow Regime: SuperCritical


Designing inlet CB 3-8
   No surface runoff to inlet
   No flow found upstream
Designing pipe P 3-10
   No flow in structure
Designing inlet CB 3-4
   No surface runoff to inlet
   No flow found upstream
Designing pipe P 3-5
   No flow in structure
Designing inlet CB 3-6

  Results:
```

```
        Gutter Flow:     1.4567 cfs               Flow From:       Area
***NOTE: Gutter flow from the downstream bypass is determined from the downstream
inlet's basin flow.***
***      It does not include any flow bypassed to the downstream inlet.
                ***
    Time of Concentration ENABLED
                 Tc:     5.0000 min               Intensity:     3.2200 in/h
       Sum C x Area:     0.4524 ac          Ave Runoff Coef:     0.9000

             Status:      Fixed
       Inlet Length:     2.7500 ft             Inlet Width:     1.2900 ft
    Flow Downstream:     1.4567 cfs
        Percent Cap:   100.0000 %                 Capacity:     1.4572 cfs
             Spread:     4.1800 ft
    Depth in Gutter:     0.2436 ft          Assigned Bypass:        N/A


Designing pipe P 3-7

  Results:
        Total Flow:     1.4567 cfs               Flow From:   Upstream

    Time of Concentration ENABLED
                 Tc:     5.2228 min               Intensity:     3.2200 in/h
       Sum C x Area:     0.4524 ac          Ave Runoff Coef:     0.0000

             Status:      Fixed                      Slope:     0.0150 ft/ft
        Pipe Width:    18.0000 in             Pipe Height:    18.0000 in
      Depth of Flow:     0.3400 ft             Flow Status:    Partial
     Critical Depth:     0.4500 ft                Capacity:    12.8584 cfs
           Velocity:     4.8236 ft/s
      Froude Number:     1.7378                Flow Regime: SuperCritical


Designing manhole MH 3-2

  Results:
        Total Flow:    11.8965 cfs               Flow From:   Upstream

    Time of Concentration ENABLED
                 Tc:    10.5677 min            Sum C x Area:     3.9049 ac

             Status:      Fixed
      Chamber Width:     5.0000 ft           Chamber Length:     5.0000 ft


Designing pipe P 3-3

  Results:
        Total Flow:    11.8965 cfs               Flow From:   Upstream
```

```
    Time of Concentration ENABLED
                 Tc:    11.1541 min              Intensity:     2.4012 in/h
       Sum C x Area:     3.9049 ac          Ave Runoff Coef:     0.0000

             Status:      Fixed                     Slope:     0.0052 ft/ft
         Pipe Width:    24.0000 in             Pipe Height:    24.0000 in
      Depth of Flow:     1.2650 ft             Flow Status:    Partial
     Critical Depth:     1.2300 ft                Capacity:    16.3593 cfs
           Velocity:     5.6746 ft/s
      Froude Number:     0.9599                Flow Regime:   Critical


Designing pipe Future connection 3

  Results:
         Total Flow:     1.8200 cfs              Flow From: Injected Storm

             Status:      Fixed                     Slope:     0.0100 ft/ft
         Pipe Width:    18.0000 in             Pipe Height:    18.0000 in
      Depth of Flow:     0.4220 ft             Flow Status:    Partial
     Critical Depth:     0.5000 ft                Capacity:    10.5043 cfs
           Velocity:     4.4489 ft/s
      Froude Number:     1.4266                Flow Regime: SuperCritical


Designing inlet CB 3-1

  Results:
        Gutter Flow:     0.4540 cfs              Flow From:       Area

    Time of Concentration ENABLED
                 Tc:     5.0000 min              Intensity:     3.2200 in/h
       Sum C x Area:     0.1219 ac          Ave Runoff Coef:     0.9000

             Status:      Fixed
       Inlet Length:     2.7500 ft             Inlet Width:     1.2900 ft
    Flow Downstream:     2.2126 cfs              Bypass To:     0.0615 cfs
        Percent Cap:    86.4639 %                 Capacity:     0.3926 cfs
             Spread:     3.2788 ft
    Depth in Gutter:     0.2173 ft          Assigned Bypass:     CB 3-5


Designing pipe P 3-1

  Results:
         Total Flow:     2.2126 cfs              Flow From:   Upstream

    Time of Concentration ENABLED
                 Tc:     5.0602 min              Intensity:     3.2200 in/h
```

```
      Sum C x Area:     0.1219 ac          Ave Runoff Coef:     0.0000

            Status:      Fixed                      Slope:     0.0200 ft/ft
        Pipe Width:    18.0000 in             Pipe Height:    18.0000 in
     Depth of Flow:     0.3910 ft             Flow Status:    Partial
    Critical Depth:     0.5600 ft                Capacity:    14.8554 cfs
          Velocity:     6.0169 ft/s
     Froude Number:     2.0111                Flow Regime: SuperCritical


Designing inlet CB 3-2

  Results:
        Gutter Flow:     0.4482 cfs               Flow From:       Area

    Time of Concentration ENABLED
                 Tc:     5.0000 min              Intensity:     3.2200 in/h
      Sum C x Area:     0.1212 ac          Ave Runoff Coef:     0.9000

            Status:      Fixed
      Inlet Length:     2.7500 ft             Inlet Width:     1.2900 ft
   Flow Downstream:     0.3902 cfs              Bypass To:     0.0579 cfs
       Percent Cap:    87.0736 %                 Capacity:     0.3902 cfs
            Spread:     3.2179 ft
   Depth in Gutter:     0.2163 ft          Assigned Bypass:     CB 3-6


Designing pipe P 3-2

  Results:
       Total Flow:     0.3902 cfs               Flow From:   Upstream

    Time of Concentration ENABLED
                 Tc:     5.2984 min              Intensity:     3.2200 in/h
      Sum C x Area:     0.1212 ac          Ave Runoff Coef:     0.0000

            Status:      Fixed                      Slope:     0.0200 ft/ft
        Pipe Width:    18.0000 in             Pipe Height:    18.0000 in
     Depth of Flow:     0.1670 ft             Flow Status:    Partial
    Critical Depth:     0.2300 ft                Capacity:    14.8554 cfs
          Velocity:     3.5935 ft/s
     Froude Number:     1.8757                Flow Regime: SuperCritical


Designing manhole MH 3-1

  Results:
       Total Flow:    14.0910 cfs               Flow From:   Upstream

    Time of Concentration ENABLED
```

```
                Tc:    11.1541 min            Sum C x Area:     4.1480 ac

            Status:      Fixed
      Chamber Width:     5.0000 ft           Chamber Length:     5.0000 ft


Designing pipe P 2-9

  Results:
        Total Flow:    14.0910 cfs               Flow From:   Upstream

    Time of Concentration ENABLED
                Tc:    11.9131 min               Intensity:     2.3507 in/h
       Sum C x Area:     4.1480 ac          Ave Runoff Coef:     0.0000

            Status:      Fixed                      Slope:     0.0052 ft/ft
        Pipe Width:    30.0000 in              Pipe Height:    30.0000 in
      Depth of Flow:     1.2110 ft              Flow Status:    Partial
     Critical Depth:     1.2600 ft                 Capacity:    29.7160 cfs
           Velocity:     5.9723 ft/s
      Froude Number:     1.0841                 Flow Regime: SuperCritical


Designing inlet CB 2-5

  Results:
       Gutter Flow:     0.3408 cfs               Flow From:       Area

    Time of Concentration ENABLED
                Tc:     5.0000 min               Intensity:     3.2200 in/h
       Sum C x Area:     0.1020 ac          Ave Runoff Coef:     0.9000

            Status:      Fixed
       Inlet Length:     2.7500 ft              Inlet Width:     1.2900 ft
    Flow Downstream:     0.3284 cfs               Bypass To:     0.0124 cfs
        Percent Cap:    96.3683 %                  Capacity:     0.3284 cfs
             Spread:     1.9249 ft
    Depth in Gutter:     0.1925 ft          Assigned Bypass:     CB 2-3


Designing pipe P 2-7

  Results:
        Total Flow:     0.3284 cfs               Flow From:   Upstream

    Time of Concentration ENABLED
                Tc:     5.1093 min               Intensity:     3.2200 in/h
       Sum C x Area:     0.1020 ac          Ave Runoff Coef:     0.0000

            Status:      Fixed                      Slope:     0.0200 ft/ft
```

```
         Pipe Width:    18.0000 in              Pipe Height:    18.0000 in
      Depth of Flow:     0.1540 ft              Flow Status:    Partial
     Critical Depth:     0.2100 ft                 Capacity:    14.8554 cfs
           Velocity:     3.4031 ft/s
      Froude Number:     1.8517                 Flow Regime: SuperCritical


Designing inlet CB 2-6

  Results:
        Gutter Flow:     0.3383 cfs               Flow From:       Area

    Time of Concentration ENABLED
                 Tc:     5.0000 min               Intensity:     3.2200 in/h
       Sum C x Area:     0.1014 ac          Ave Runoff Coef:     0.9000

             Status:      Fixed
       Inlet Length:     2.7500 ft              Inlet Width:     1.2900 ft
    Flow Downstream:     0.3264 cfs               Bypass To:     0.0119 cfs
        Percent Cap:    96.4963 %                 Capacity:     0.3264 cfs
             Spread:     1.9035 ft
    Depth in Gutter:     0.1904 ft          Assigned Bypass:     CB 2-4


Designing pipe P 2-8

  Results:
        Total Flow:     0.3264 cfs               Flow From:   Upstream

    Time of Concentration ENABLED
                 Tc:     5.3110 min               Intensity:     3.2200 in/h
       Sum C x Area:     0.1014 ac          Ave Runoff Coef:     0.0000

             Status:      Fixed                      Slope:     0.0200 ft/ft
         Pipe Width:    18.0000 in              Pipe Height:    18.0000 in
      Depth of Flow:     0.1530 ft              Flow Status:    Partial
     Critical Depth:     0.2100 ft                 Capacity:    14.8554 cfs
           Velocity:     3.4146 ft/s
      Froude Number:     1.8642                 Flow Regime: SuperCritical


Designing manhole MH 2-3

  Results:
        Total Flow:    14.2850 cfs               Flow From:   Upstream

    Time of Concentration ENABLED
                 Tc:    11.9131 min            Sum C x Area:     4.3514 ac

             Status:      Fixed
```

```
      Chamber Width:     5.0000 ft           Chamber Length:     5.0000 ft


Designing pipe P 2-6

  Results:
         Total Flow:    14.2850 cfs               Flow From:   Upstream

    Time of Concentration ENABLED
                 Tc:    12.7127 min               Intensity:     2.2855 in/h
       Sum C x Area:     4.3514 ac          Ave Runoff Coef:     0.0000

             Status:      Fixed                      Slope:     0.0056 ft/ft
         Pipe Width:    30.0000 in              Pipe Height:    30.0000 in
      Depth of Flow:     1.1980 ft              Flow Status:    Partial
     Critical Depth:     1.2700 ft                 Capacity:    30.6858 cfs
           Velocity:     6.1391 ft/s
      Froude Number:     1.1220                 Flow Regime: SuperCritical


Designing pipe Future connection 2

  Results:
         Total Flow:     2.0700 cfs               Flow From: Injected Storm

             Status:      Fixed                      Slope:     0.0100 ft/ft
         Pipe Width:    18.0000 in              Pipe Height:    18.0000 in
      Depth of Flow:     0.4510 ft              Flow Status:    Partial
     Critical Depth:     0.5400 ft                 Capacity:    10.5043 cfs
           Velocity:     4.6140 ft/s
      Froude Number:     1.4266                 Flow Regime: SuperCritical


Designing inlet CB 2-3

  Results:
        Gutter Flow:     0.8877 cfs               Flow From:       Area
***NOTE: Gutter flow from the downstream bypass is determined from the downstream
inlet's basin flow.***
***      It does not include any flow bypassed to the downstream inlet.
                ***
    Time of Concentration ENABLED
                 Tc:     5.0000 min               Intensity:     3.2200 in/h
       Sum C x Area:     0.1937 ac          Ave Runoff Coef:     0.9000

             Status:      Fixed
       Inlet Length:     2.7500 ft              Inlet Width:     1.2900 ft
    Flow Downstream:     2.6938 cfs               Bypass To:     0.2639 cfs
        Percent Cap:    70.2746 %                 Capacity:     0.6238 cfs
             Spread:     4.3217 ft
```

```
    Depth in Gutter:     0.2464 ft          Assigned Bypass:     CB 2-1


Designing pipe P 2-4

  Results:
         Total Flow:     2.6938 cfs               Flow From:   Upstream

    Time of Concentration ENABLED
                 Tc:     5.0567 min               Intensity:     3.2200 in/h
       Sum C x Area:     0.1937 ac          Ave Runoff Coef:     0.0000

             Status:      Fixed                      Slope:     0.0200 ft/ft
         Pipe Width:    18.0000 in              Pipe Height:    18.0000 in
      Depth of Flow:     0.4320 ft              Flow Status:    Partial
     Critical Depth:     0.6200 ft                 Capacity:    14.8554 cfs
           Velocity:     6.3739 ft/s
      Froude Number:     2.0179                 Flow Regime: SuperCritical


Designing inlet CB 2-4

  Results:
        Gutter Flow:     0.8866 cfs               Flow From:       Area
***NOTE: Gutter flow from the downstream bypass is determined from the downstream
inlet's basin flow.***
***      It does not include any flow bypassed to the downstream inlet.
                ***
    Time of Concentration ENABLED
                 Tc:     5.0000 min               Intensity:     3.2200 in/h
       Sum C x Area:     0.1936 ac          Ave Runoff Coef:     0.9000

             Status:      Fixed
       Inlet Length:     2.7500 ft              Inlet Width:     1.2900 ft
    Flow Downstream:     0.6234 cfs               Bypass To:     0.2631 cfs
        Percent Cap:    70.3195 %                  Capacity:     0.6234 cfs
             Spread:     4.3170 ft
    Depth in Gutter:     0.2463 ft          Assigned Bypass:     CB 2-2


Designing pipe P 2-5

  Results:
         Total Flow:     0.6234 cfs               Flow From:   Upstream

    Time of Concentration ENABLED
                 Tc:     5.2586 min               Intensity:     3.2200 in/h
       Sum C x Area:     0.1936 ac          Ave Runoff Coef:     0.0000

             Status:      Fixed                      Slope:     0.0200 ft/ft
```

```
         Pipe Width:    18.0000 in              Pipe Height:    18.0000 in
      Depth of Flow:     0.2090 ft              Flow Status:    Partial
     Critical Depth:     0.2900 ft                 Capacity:    14.8554 cfs
           Velocity:     4.1458 ft/s
      Froude Number:     1.9278                 Flow Regime: SuperCritical


Designing manhole MH 2-2

  Results:
         Total Flow:    16.9144 cfs               Flow From:   Upstream

    Time of Concentration ENABLED
                 Tc:    12.7127 min            Sum C x Area:     4.7387 ac

             Status:      Fixed
      Chamber Width:     5.0000 ft           Chamber Length:     5.0000 ft


Designing pipe P 2-3

  Results:
         Total Flow:    16.9144 cfs               Flow From:   Upstream

    Time of Concentration ENABLED
                 Tc:    13.2366 min               Intensity:     2.2167 in/h
       Sum C x Area:     4.7387 ac          Ave Runoff Coef:     0.0000

             Status:      Fixed                      Slope:     0.0056 ft/ft
         Pipe Width:    30.0000 in              Pipe Height:    30.0000 in
      Depth of Flow:     1.3240 ft              Flow Status:    Partial
     Critical Depth:     1.3900 ft                 Capacity:    30.6913 cfs
           Velocity:     6.4027 ft/s
      Froude Number:     1.0976                 Flow Regime: SuperCritical


Designing inlet CB 2-1

  Results:
        Gutter Flow:     0.8710 cfs               Flow From:       Area
***NOTE: Gutter flow from the downstream bypass is determined from the downstream
inlet's basin flow.***
***      It does not include any flow bypassed to the downstream inlet.
                 ***
    Time of Concentration ENABLED
                 Tc:     5.0000 min               Intensity:     3.2200 in/h
       Sum C x Area:     0.1920 ac          Ave Runoff Coef:     0.9000

             Status:      Fixed
       Inlet Length:     2.7500 ft              Inlet Width:     1.2900 ft
```

```
    Flow Downstream:     0.6181 cfs               Bypass To:     0.2529 cfs
        Percent Cap:    70.9683 %                  Capacity:     0.6181 cfs
             Spread:     4.2483 ft
    Depth in Gutter:     0.2450 ft          Assigned Bypass:     CB 1-5


Designing pipe P 2-1

  Results:
         Total Flow:     0.6181 cfs               Flow From:   Upstream

    Time of Concentration ENABLED
                 Tc:     5.0877 min               Intensity:     3.2200 in/h
       Sum C x Area:     0.1920 ac          Ave Runoff Coef:     0.0000

             Status:      Fixed                      Slope:     0.0200 ft/ft
         Pipe Width:    18.0000 in              Pipe Height:    18.0000 in
      Depth of Flow:     0.2080 ft              Flow Status:    Partial
     Critical Depth:     0.2900 ft                 Capacity:    14.8554 cfs
           Velocity:     4.1391 ft/s
      Froude Number:     1.9295                 Flow Regime: SuperCritical


Designing inlet CB 2-2

  Results:
        Gutter Flow:     0.8682 cfs               Flow From:       Area
***NOTE: Gutter flow from the downstream bypass is determined from the downstream
inlet's basin flow.***
***      It does not include any flow bypassed to the downstream inlet.
                ***
    Time of Concentration ENABLED
                 Tc:     5.0000 min               Intensity:     3.2200 in/h
       Sum C x Area:     0.1916 ac          Ave Runoff Coef:     0.9000

             Status:      Fixed
       Inlet Length:     2.7500 ft              Inlet Width:     1.2900 ft
    Flow Downstream:     0.6170 cfs               Bypass To:     0.2513 cfs
        Percent Cap:    71.0611 %                  Capacity:     0.6170 cfs
             Spread:     4.2392 ft
    Depth in Gutter:     0.2447 ft          Assigned Bypass:     CB 1-6


Designing pipe P 2-2

  Results:
         Total Flow:     0.6170 cfs               Flow From:   Upstream

    Time of Concentration ENABLED
                 Tc:     5.2593 min               Intensity:     3.2200 in/h
```

```
       Sum C x Area:     0.1916 ac          Ave Runoff Coef:     0.0000

             Status:      Fixed                      Slope:     0.0200 ft/ft
         Pipe Width:    18.0000 in              Pipe Height:    18.0000 in
      Depth of Flow:     0.2080 ft              Flow Status:    Partial
     Critical Depth:     0.2900 ft                 Capacity:    14.8554 cfs
           Velocity:     4.1315 ft/s
      Froude Number:     1.9259                 Flow Regime: SuperCritical


Designing manhole MH 2-1

  Results:
        Total Flow:    17.5339 cfs               Flow From:   Upstream

    Time of Concentration ENABLED
                Tc:    13.2366 min            Sum C x Area:     5.1223 ac

             Status:      Fixed
      Chamber Width:     5.0000 ft           Chamber Length:     5.0000 ft


Designing pipe P 1-11

  Results:
        Total Flow:    17.5339 cfs               Flow From:   Upstream

    Time of Concentration ENABLED
                Tc:    13.5640 min               Intensity:     2.1717 in/h
       Sum C x Area:     5.1223 ac          Ave Runoff Coef:     0.0000

             Status:      Fixed                      Slope:     0.0056 ft/ft
         Pipe Width:    30.0000 in              Pipe Height:    30.0000 in
      Depth of Flow:     1.3550 ft              Flow Status:    Partial
     Critical Depth:     1.4100 ft                 Capacity:    30.6508 cfs
           Velocity:     6.4485 ft/s
      Froude Number:     1.0887                 Flow Regime: SuperCritical


Designing inlet CB 1-8
   No surface runoff to inlet
   No flow found upstream
Designing pipe P 1-12
   No flow in structure
Designing inlet CB 1-4
   No surface runoff to inlet
   No flow found upstream
Designing pipe P 1-7
   No flow in structure
Designing inlet CB 1-6
```

```
  Results:
        Gutter Flow:     1.1063 cfs               Flow From:       Area
***NOTE: Gutter flow from the downstream bypass is determined from the downstream
inlet's basin flow.***
***      It does not include any flow bypassed to the downstream inlet.
                ***
    Time of Concentration ENABLED
                  Tc:     5.0000 min               Intensity:     3.2200 in/h
       Sum C x Area:     0.3436 ac          Ave Runoff Coef:     0.9000

             Status:      Fixed
       Inlet Length:     2.7500 ft              Inlet Width:     1.2900 ft
    Flow Downstream:     1.1063 cfs
        Percent Cap:   100.0000 %                  Capacity:     1.1069 cfs
             Spread:     2.1400 ft
    Depth in Gutter:     0.2028 ft          Assigned Bypass:        N/A


Designing pipe P 1-9

  Results:
        Total Flow:     1.1063 cfs               Flow From:   Upstream

    Time of Concentration ENABLED
                  Tc:     5.2186 min               Intensity:     3.2200 in/h
       Sum C x Area:     0.3436 ac          Ave Runoff Coef:     0.0000

             Status:      Fixed                       Slope:     0.0200 ft/ft
         Pipe Width:    18.0000 in              Pipe Height:    18.0000 in
      Depth of Flow:     0.2770 ft              Flow Status:    Partial
     Critical Depth:     0.3900 ft                 Capacity:    14.8554 cfs
           Velocity:     4.9044 ft/s
      Froude Number:     1.9693                 Flow Regime: SuperCritical


Designing inlet CB 1-7
   No surface runoff to inlet
   No flow found upstream
Designing pipe P 1-10
   No flow in structure
Designing inlet CB 1-3
   No surface runoff to inlet
   No flow found upstream
Designing pipe P 1-6
   No flow in structure
Designing inlet CB 1-5

  Results:
        Gutter Flow:     1.0950 cfs               Flow From:       Area
```

```
***NOTE: Gutter flow from the downstream bypass is determined from the downstream
inlet's basin flow.***
***      It does not include any flow bypassed to the downstream inlet.
                ***
    Time of Concentration ENABLED
                 Tc:     5.0000 min              Intensity:     3.2200 in/h
       Sum C x Area:     0.3401 ac          Ave Runoff Coef:     0.9000

             Status:      Fixed
       Inlet Length:     2.7500 ft             Inlet Width:     1.2900 ft
    Flow Downstream:     1.0950 cfs
        Percent Cap:   100.0000 %                 Capacity:     1.0954 cfs
             Spread:     2.0700 ft
    Depth in Gutter:     0.2014 ft          Assigned Bypass:        N/A


Designing pipe P 1-8

  Results:
         Total Flow:     1.0950 cfs              Flow From:   Upstream

    Time of Concentration ENABLED
                 Tc:     5.0737 min              Intensity:     3.2200 in/h
       Sum C x Area:     0.3401 ac          Ave Runoff Coef:     0.0000

             Status:      Fixed                     Slope:     0.0200 ft/ft
         Pipe Width:    18.0000 in             Pipe Height:    18.0000 in
      Depth of Flow:     0.2750 ft             Flow Status:    Partial
     Critical Depth:     0.3900 ft                Capacity:    14.8554 cfs
           Velocity:     4.9047 ft/s
      Froude Number:     1.9769                Flow Regime: SuperCritical


Designing manhole MH 1-4

  Results:
         Total Flow:    18.8550 cfs              Flow From:   Upstream

    Time of Concentration ENABLED
                 Tc:    13.5640 min           Sum C x Area:     5.8059 ac

             Status:      Fixed
      Chamber Width:     5.0000 ft          Chamber Length:     5.0000 ft


Designing pipe P 1-5

  Results:
         Total Flow:    18.8550 cfs              Flow From:   Upstream
```

```
    Time of Concentration ENABLED
                 Tc:    13.8246 min              Intensity:     2.1435 in/h
       Sum C x Area:     5.8059 ac          Ave Runoff Coef:     0.0000

             Status:      Fixed                     Slope:     0.0056 ft/ft
         Pipe Width:    30.0000 in             Pipe Height:    30.0000 in
      Depth of Flow:     1.4150 ft             Flow Status:    Partial
     Critical Depth:     1.4700 ft                Capacity:    30.7090 cfs
           Velocity:     6.5739 ft/s
      Froude Number:     1.0778                Flow Regime: SuperCritical


Designing pipe Future connection 1

  Results:
         Total Flow:     0.6400 cfs              Flow From: Injected Storm

             Status:      Fixed                     Slope:     0.0100 ft/ft
         Pipe Width:    18.0000 in             Pipe Height:    18.0000 in
      Depth of Flow:     0.2510 ft             Flow Status:    Partial
     Critical Depth:     0.2900 ft                Capacity:    10.5043 cfs
           Velocity:     3.2681 ft/s
      Froude Number:     1.3817                Flow Regime: SuperCritical


Designing inlet CB 1-1

  Results:
        Gutter Flow:     0.6300 cfs              Flow From:       Area

    Time of Concentration ENABLED
                 Tc:     5.0000 min              Intensity:     3.2200 in/h
       Sum C x Area:     0.1571 ac          Ave Runoff Coef:     0.9000

             Status:      Fixed
       Inlet Length:     2.7500 ft             Inlet Width:     1.2900 ft
    Flow Downstream:     1.1458 cfs              Bypass To:     0.1242 cfs
        Percent Cap:    80.2861 %                Capacity:     0.5058 cfs
             Spread:     3.4343 ft
    Depth in Gutter:     0.2281 ft          Assigned Bypass:     CB 1-5


Designing pipe P 1-3

  Results:
         Total Flow:     1.1458 cfs              Flow From:   Upstream

    Time of Concentration ENABLED
                 Tc:     5.0744 min              Intensity:     3.2200 in/h
       Sum C x Area:     0.1571 ac          Ave Runoff Coef:     0.0000
```

```
            Status:      Fixed                       Slope:     0.0200 ft/ft
        Pipe Width:    18.0000 in              Pipe Height:    18.0000 in
     Depth of Flow:     0.2810 ft              Flow Status:    Partial
    Critical Depth:     0.3900 ft                 Capacity:    14.8554 cfs
          Velocity:     4.9764 ft/s
     Froude Number:     1.9832                 Flow Regime: SuperCritical


Designing inlet CB 1-2

  Results:
        Gutter Flow:     0.6326 cfs               Flow From:       Area

    Time of Concentration ENABLED
                Tc:     5.0000 min               Intensity:     3.2200 in/h
      Sum C x Area:     0.1549 ac          Ave Runoff Coef:     0.9000

            Status:      Fixed
      Inlet Length:     2.7500 ft              Inlet Width:     1.2900 ft
   Flow Downstream:     0.4987 cfs               Bypass To:     0.1339 cfs
       Percent Cap:    78.8389 %                 Capacity:     0.4987 cfs
            Spread:     3.6112 ft
   Depth in Gutter:     0.2322 ft          Assigned Bypass:     CB 1-6


Designing pipe P 1-4

  Results:
        Total Flow:     0.4987 cfs               Flow From:   Upstream

    Time of Concentration ENABLED
                Tc:     5.2751 min               Intensity:     3.2200 in/h
      Sum C x Area:     0.1549 ac          Ave Runoff Coef:     0.0000

            Status:      Fixed                       Slope:     0.0200 ft/ft
        Pipe Width:    18.0000 in              Pipe Height:    18.0000 in
     Depth of Flow:     0.1880 ft              Flow Status:    Partial
    Critical Depth:     0.2600 ft                 Capacity:    14.8554 cfs
          Velocity:     3.8665 ft/s
     Froude Number:     1.8989                 Flow Regime: SuperCritical


Designing manhole MH 1-3

  Results:
        Total Flow:    20.0266 cfs               Flow From:   Upstream

    Time of Concentration ENABLED
                Tc:    13.8246 min            Sum C x Area:     6.1179 ac
```

```
            Status:      Fixed
      Chamber Width:     5.0000 ft           Chamber Length:     5.0000 ft


Designing pipe P 1-2

  Results:
         Total Flow:    20.0266 cfs               Flow From:   Upstream

    Time of Concentration ENABLED
                 Tc:    14.4524 min               Intensity:     2.1211 in/h
       Sum C x Area:     6.1179 ac          Ave Runoff Coef:     0.0000

            Status:      Fixed                      Slope:     0.0056 ft/ft
         Pipe Width:    30.0000 in              Pipe Height:    30.0000 in
      Depth of Flow:     1.4730 ft              Flow Status:    Partial
     Critical Depth:     1.5100 ft                 Capacity:    30.6420 cfs
           Velocity:     6.6504 ft/s
      Froude Number:     1.0601                 Flow Regime: SuperCritical


Designing manhole MH 1-2

  Results:
         Total Flow:    19.6963 cfs               Flow From:   Upstream

    Time of Concentration ENABLED
                 Tc:    14.4524 min            Sum C x Area:     6.1179 ac

            Status:      Fixed
      Chamber Width:     5.0000 ft           Chamber Length:     5.0000 ft


Designing pipe P 1-1

  Results:
         Total Flow:    19.6963 cfs               Flow From:   Upstream

    Time of Concentration ENABLED
                 Tc:    14.7558 min               Intensity:     2.0671 in/h
       Sum C x Area:     6.1179 ac          Ave Runoff Coef:     0.0000

            Status:      Fixed                      Slope:     0.0056 ft/ft
         Pipe Width:    30.0000 in              Pipe Height:    30.0000 in
      Depth of Flow:     1.4560 ft              Flow Status:    Partial
     Critical Depth:     1.5000 ft                 Capacity:    30.6944 cfs
           Velocity:     6.6329 ft/s
      Froude Number:     1.0660                 Flow Regime: SuperCritical
```

Designing manhole MH 1-1

Results:

Total Flow:	19.5367 cfs	Flow From:	Upstream

Time of Concentration ENABLED

Tc:	14.7558 min	Sum C x Area:	6.1179 ac
Status:	Fixed		
Chamber Width:	5.0000 ft	Chamber Length:	5.0000 ft

Designing pipe City pipe 2

Results:

Total Flow:	19.5367 cfs	Flow From:	Upstream

Time of Concentration ENABLED

Tc:	14.8218 min	Intensity:	2.0410 in/h
Sum C x Area:	6.1179 ac	Ave Runoff Coef:	0.0000
Status:	Fixed	Slope:	0.0056 ft/ft
Pipe Width:	30.0000 in	Pipe Height:	30.0000 in
Depth of Flow:	1.4480 ft	Flow Status:	Partial
Critical Depth:	1.4900 ft	Capacity:	30.6944 cfs
Velocity:	6.6231 ft/s		
Froude Number:	1.0686	Flow Regime:	SuperCritical

Designing manhole City MH

Results:

Total Flow:	19.5019 cfs	Flow From:	Upstream

Time of Concentration ENABLED

Tc:	14.8218 min	Sum C x Area:	6.1179 ac
Status:	Fixed		
Chamber Width:	5.0000 ft	Chamber Length:	5.0000 ft

Designing pipe City pipe 1

Results:

Total Flow:	19.5019 cfs	Flow From:	Upstream

Time of Concentration ENABLED

Tc:	14.9822 min	Intensity:	2.0353 in/h
Sum C x Area:	6.1179 ac	Ave Runoff Coef:	0.0000

```
            Status:      Fixed                        Slope:     0.0050 ft/ft
        Pipe Width:    30.0000 in              Pipe Height:    30.0000 in
     Depth of Flow:     1.5000 ft              Flow Status:    Partial
    Critical Depth:     1.4900 ft                 Capacity:    29.0035 cfs
          Velocity:     6.3367 ft/s
     Froude Number:     0.9970                 Flow Regime:   Critical
```

HGL/EGL Computations:

Table A:

```
  Struct_ID           D       Q       L       V       d       dc     V^2/2g   Sf
Dn_Soffit EGLdn  HGLdn  Tot_Loss EGLup  HGLup   Rim_Elev.
                     (in)    (cfs)   (ft)   (ft/s)   (ft)     (ft)    (ft)  (ft/ft)
(ft)   (ft)    (ft)     (ft)   (ft)   (ft)     (ft)

  Outfall              -       -       -       -       -       -       -       -
  -       -       -       -       -   4645.92     -
    (Alternate HGL and EGL Used)
                                 4647.04 4646.41
    City pipe 1       30     19.50   61.00    6.34    1.50    1.49    0.62  0.0050
4646.92 4647.04 4646.41    0.31 4647.34 4646.72     -
    City MH            -       -       -       -       -       -       -       -
  -   4647.34 4646.72    0.07 4647.42 4646.79 4656.33
    City pipe 2       30     19.54   26.23    6.62    1.45    1.49    0.68     -
4647.21 4647.47 4646.79     -   4646.96 4646.28     -
    MH 1-1             -       -       -       -       -       -       -       -
  -   4646.96 4646.28     -   4646.96 4646.28 4656.53
    P 1-1             30     19.70  120.73    6.63    1.46    1.50    0.68     -
4647.84 4647.48 4646.80     -   4648.13 4647.44     -
    MH 1-2             -       -       -       -       -       -       -       -
  -   4648.13 4647.44     -   4648.13 4647.44 4656.86
    P 1-2             30     20.03  250.52    6.65    1.47    1.51    0.69     -
4648.52 4648.18 4647.49     -   4649.55 4648.86     -
    MH 1-3             -       -       -       -       -       -       -       -
  -   4649.55 4648.86     -   4649.55 4648.86 4655.82
    P 1-5             30     18.86  102.80    6.57    1.41    1.47    0.67     -
4649.92 4649.53 4648.86     -   4650.05 4649.38     -
    MH 1-4             -       -       -       -       -       -       -       -
  -   4650.05 4649.38     -   4650.05 4649.38 4655.51
    P 1-11            30     17.53  126.65    6.45    1.35    1.41    0.65     -
4650.49 4650.03 4649.38     -   4650.68 4650.03     -
    MH 2-1             -       -       -       -       -       -       -       -
  -   4650.68 4650.03     -   4650.68 4650.03 4656.26
```

P 2-3 30 16.91 201.26 6.40 1.32 1.39 0.64 -
4651.20 4650.67 4650.03 - 4651.76 4651.13 -
MH 2-2 - - - - - - - -
- 4651.76 4651.13 - 4651.76 4651.13 4658.09
P 2-6 30 14.29 294.55 6.14 1.20 1.27 0.59 -
4652.33 4651.71 4651.13 - 4653.23 4652.65 -
MH 2-3 - - - - - - - -
- 4653.23 4652.65 - 4653.23 4652.65 4660.64
P 2-9 30 14.09 271.95 5.97 1.21 1.26 0.55 -
4653.95 4653.22 4652.66 - 4654.62 4654.06 -
MH 3-1 - - - - - - - -
- 4654.62 4654.06 0.07 4654.68 4654.13 4660.47
(Alternate HGL and EGL Used)
4655.47 4654.97
P 3-3 24 11.90 199.67 5.67 1.26 1.23 0.50 0.0052
4655.35 4655.47 4654.97 1.04 4656.51 4656.01 -
MH 3-2 - - - - - - - -
- 4656.51 4656.01 0.12 4656.63 4656.13 4659.69
P 3-9 24 9.87 128.64 3.14 - - 0.15 0.0019
4656.39 4656.63 4656.13 0.24 4656.88 4656.72 -
MH 3-3 - - - - - - - -
- 4656.88 4656.72 0.03 4656.91 4656.76 4660.12
(Alternate HGL and EGL Used)
4657.31 4656.90
P 3-13 18 9.11 187.00 5.16 - - 0.41 0.0075
4657.07 4657.31 4656.90 1.41 4658.72 4658.31 -
MH 4-1 - - - - - - - -
- 4658.72 4658.31 0.15 4658.87 4658.46 4662.28
P 4-3 18 6.98 268.23 5.63 - - 0.49 0.0044
4658.45 4658.87 4658.46 - 4660.37 4659.88 -
MH 4-2 - - - - - - - -
- 4660.37 4659.88 - 4660.37 4659.88 4667.62
P 4-6 18 5.83 295.97 5.42 0.88 0.93 0.46 -
4660.42 4660.33 4659.88 - 4662.40 4661.95 -
MH 4-3 - - - - - - - -
- 4662.40 4661.95 - 4662.40 4661.95 4671.99
P 4-9 18 4.35 225.81 5.05 0.73 0.80 0.40 -
4662.60 4662.34 4661.95 - 4663.86 4663.47 -
MH 5-1 - - - - - - - -
- 4663.86 4663.47 - 4663.86 4663.47 4673.48
P 5-1 18 4.48 202.16 5.09 0.75 0.81 0.40 -
4664.26 4663.91 4663.51 - 4665.37 4664.97 -
MH 5-2 - - - - - - - -
- 4665.37 4664.97 - 4665.37 4664.97 4673.66
P 5-2 18 4.61 224.54 5.12 0.76 0.82 0.41 -
4665.75 4665.42 4665.01 - 4667.04 4666.63 -
MH 5-3 - - - - - - - -
- 4667.04 4666.63 - 4667.04 4666.63 4672.41
P 5-5 18 2.65 141.68 4.43 0.56 0.61 0.30 -
4667.40 4666.94 4666.63 - 4667.78 4667.47 -

MH 5-4 - - - - - - - -
- 4667.78 4667.47 - 4667.78 4667.47 4671.82
P 5-8 18 1.35 21.93 4.08 0.36 0.43 0.26 -
4668.44 4667.73 4667.47 - 4667.76 4667.51 -
CB 5-5 - - - - - - - -
- 4667.76 4667.51 - 4667.76 4667.51 4671.72

New Branch - - - - - - - -
- - - - 4649.55 4648.86 -
MH 1-3 - - - - - - - -
- 4649.55 4648.86 - 4649.55 4648.86 4655.82
P 1-3 18 1.15 22.21 4.98 0.28 0.39 0.38 -
4652.26 4651.43 4651.05 - 4651.82 4651.44 -
CB 1-1 - - - - - - - -
- 4651.82 4651.44 - 4651.82 4651.44 4655.71
Future connection 1 18 0.64 11.59 3.27 0.25 0.29 0.17
- 4652.66 4651.61 4651.44 - 4651.69 4651.53 -

New Branch - - - - - - - -
- - - - 4649.55 4648.86 -
MH 1-3 - - - - - - - -
- 4649.55 4648.86 - 4649.55 4648.86 4655.82
P 1-4 18 0.50 63.82 3.87 0.19 0.26 0.23 -
4651.85 4650.77 4650.54 - 4652.00 4651.77 -
CB 1-2 - - - - - - - -
- 4652.00 4651.77 - 4652.00 4651.77 4655.70

New Branch - - - - - - - -
- - - - 4650.05 4649.38 -
MH 1-4 - - - - - - - -
- 4650.05 4649.38 - 4650.05 4649.38 4655.51
P 1-9 18 1.11 64.34 4.90 0.28 0.39 0.37 -
4651.18 4650.33 4649.96 - 4651.57 4651.19 -
CB 1-6 - - - - - - - -
- 4651.57 4651.19 - 4651.57 4651.19 4655.40

New Branch - - - - - - - -
- - - - 4650.05 4649.38 -
MH 1-4 - - - - - - - -
- 4650.05 4649.38 - 4650.05 4649.38 4655.51
P 1-8 18 1.09 21.68 4.90 0.28 0.39 0.37 -
4651.58 4650.73 4650.36 - 4651.12 4650.74 -
CB 1-5 - - - - - - - -
- 4651.12 4650.74 - 4651.12 4650.74 4655.40

New Branch - - - - - - - -
- - - - 4650.68 4650.03 -
MH 2-1 - - - - - - - -
- 4650.68 4650.03 - 4650.68 4650.03 4656.26
P 2-1 18 0.62 21.77 4.14 0.21 0.29 0.27 -

4652.41 4651.38 4651.12 - 4651.77 4651.50 -
CB 2-1 - - - - - - - -
- 4651.77 4651.50 - 4651.77 4651.50 4656.16

New Branch - - - - - - - -
- - - - 4650.68 4650.03 -
MH 2-1 - - - - - - - -
- 4650.68 4650.03 - 4650.68 4650.03 4656.26
P 2-2 18 0.62 64.28 4.13 0.21 0.29 0.27 -
4652.03 4651.01 4650.74 - 4652.24 4651.98 -
CB 2-2 - - - - - - - -
- 4652.24 4651.98 - 4652.24 4651.98 4656.18

New Branch - - - - - - - -
- - - - 4651.76 4651.13 -
MH 2-2 - - - - - - - -
- 4651.76 4651.13 - 4651.76 4651.13 4658.09
P 2-4 18 2.69 21.69 6.37 0.43 0.62 0.63 -
4653.95 4653.51 4652.88 - 4653.89 4653.26 -
CB 2-3 - - - - - - - -
- 4653.89 4653.26 - 4653.89 4653.26 4657.98
Future connection 2 18 2.07 13.65 4.61 0.45 0.54 0.33
- 4654.39 4653.67 4653.34 - 4653.81 4653.48 -

New Branch - - - - - - - -
- - - - 4651.76 4651.13 -
MH 2-2 - - - - - - - -
- 4651.76 4651.13 - 4651.76 4651.13 4658.09
P 2-5 18 0.62 64.32 4.15 0.21 0.29 0.27 -
4653.50 4652.48 4652.21 - 4653.72 4653.45 -
CB 2-4 - - - - - - - -
- 4653.72 4653.45 - 4653.72 4653.45 4657.99

New Branch - - - - - - - -
- - - - 4653.23 4652.65 -
MH 2-3 - - - - - - - -
- 4653.23 4652.65 - 4653.23 4652.65 4660.64
P 2-7 18 0.33 22.32 3.40 0.15 0.21 0.18 -
4656.68 4655.52 4655.34 - 4655.91 4655.73 -
CB 2-5 - - - - - - - -
- 4655.91 4655.73 - 4655.91 4655.73 4660.52

New Branch - - - - - - - -
- - - - 4653.23 4652.65 -
MH 2-3 - - - - - - - -
- 4653.23 4652.65 - 4653.23 4652.65 4660.64
P 2-8 18 0.33 63.71 3.41 0.15 0.21 0.18 -
4656.16 4654.99 4654.81 - 4656.21 4656.03 -
CB 2-6 - - - - - - - -
- 4656.21 4656.03 - 4656.21 4656.03 4660.53

```
  New Branch           -       -       -       -       -       -       -       -
  -       -       -       -   4654.62 4654.06     -
    MH 3-1             -       -       -       -       -       -       -       -
  -   4654.62 4654.06     -   4654.62 4654.06 4660.47
    P 3-1             18      2.21   21.73    6.02    0.39    0.56    0.56     -
4656.59 4656.04 4655.48     -   4656.43 4655.87     -
    CB 3-1             -       -       -       -       -       -       -       -
  -   4656.43 4655.87     -   4656.43 4655.87 4660.36
    Future connection 3    18      1.82   11.41    4.45    0.42    0.50    0.31
-   4656.97 4656.20 4655.90     -   4656.32 4656.01     -

  New Branch           -       -       -       -       -       -       -       -
  -       -       -       -   4654.62 4654.06     -
    MH 3-1             -       -       -       -       -       -       -       -
  -   4654.62 4654.06     -   4654.62 4654.06 4660.47
    P 3-2             18      0.39   64.33    3.59    0.17    0.23    0.20     -
4655.83 4654.70 4654.50     -   4655.94 4655.74     -
    CB 3-2             -       -       -       -       -       -       -       -
  -   4655.94 4655.74     -   4655.94 4655.74 4660.37

  New Branch           -       -       -       -       -       -       -       -
  -       -       -       -   4656.51 4656.01     -
    MH 3-2             -       -       -       -       -       -       -       -
  -   4656.51 4656.01    0.04 4656.55 4656.05 4659.69
    P 3-7             18      1.46   64.47    0.82     -       -      0.01  0.0002
4655.87 4656.55 4656.05    0.01 4656.56 4656.55     -
    CB 3-6             -       -       -       -       -       -       -       -
  -   4656.56 4656.55     -   4656.56 4656.55 4659.59

  New Branch           -       -       -       -       -       -       -       -
  -       -       -       -   4656.51 4656.01     -
    MH 3-2             -       -       -       -       -       -       -       -
  -   4656.51 4656.01    0.03 4656.54 4656.04 4659.69
    P 3-6             18      1.40   21.55    0.79     -       -      0.01  0.0002
4656.01 4656.54 4656.04    0.00 4656.55 4656.54     -
    CB 3-5             -       -       -       -       -       -       -       -
  -   4656.55 4656.54     -   4656.55 4656.54 4659.59

  New Branch           -       -       -       -       -       -       -       -
  -       -       -       -   4656.88 4656.72     -
    MH 3-3             -       -       -       -       -       -       -       -
  -   4656.88 4656.72    0.01 4656.88 4656.73 4660.12
    P 3-12            18      0.63   64.36    0.36     -       -      0.00  0.0000
4656.54 4656.88 4656.73    0.00 4656.88 4656.88     -
    CB 3-10            -       -       -       -       -       -       -       -
  -   4656.88 4656.88     -   4656.88 4656.88 4660.00

  New Branch           -       -       -       -       -       -       -       -
  -       -       -       -   4656.88 4656.72     -
```

MH 3-3 - - - - - - - -
- 4656.88 4656.72 0.01 4656.88 4656.73 4660.12
P 3-11 18 0.62 21.72 0.35 - - 0.00 0.0000
4656.61 4656.88 4656.73 0.00 4656.88 4656.88 -
CB 3-9 - - - - - - - -
- 4656.88 4656.88 - 4656.88 4656.88 4660.03

New Branch - - - - - - - -
- - - - 4658.72 4658.31 -
MH 4-1 - - - - - - - -
- 4658.72 4658.31 0.06 4658.78 4658.37 4662.28
P 4-1 18 1.96 21.76 1.11 - - 0.02 0.0003
4658.50 4658.78 4658.37 0.01 4658.79 4658.77 -
CB 4-1 - - - - - - - -
- 4658.79 4658.77 0.00 4658.79 4658.77 4662.18
Future connection 4 18 1.16 6.68 0.66 - - 0.01
0.0001 4658.89 4658.79 4658.77 0.00 4658.79 4658.78 -

New Branch - - - - - - - -
- - - - 4658.72 4658.31 -
MH 4-1 - - - - - - - -
- 4658.72 4658.31 0.02 4658.74 4658.33 4662.28
P 4-2 18 0.79 64.26 0.45 - - 0.00 0.0001
4658.44 4658.74 4658.33 0.00 4658.75 4658.75 -
CB 4-2 - - - - - - - -
- 4658.75 4658.75 - 4658.75 4658.75 4662.17

New Branch - - - - - - - -
- - - - 4660.37 4659.88 -
MH 4-2 - - - - - - - -
- 4660.37 4659.88 - 4660.37 4659.88 4667.62
P 4-4 18 0.86 21.96 4.55 0.24 0.34 0.32 -
4663.92 4662.99 4662.66 - 4663.37 4663.05 -
CB 4-3 - - - - - - - -
- 4663.37 4663.05 - 4663.37 4663.05 4667.54

New Branch - - - - - - - -
- - - - 4660.37 4659.88 -
MH 4-2 - - - - - - - -
- 4660.37 4659.88 - 4660.37 4659.88 4667.62
P 4-5 18 0.83 64.35 4.49 0.24 0.33 0.31 -
4663.50 4662.55 4662.24 - 4663.79 4663.47 -
CB 4-4 - - - - - - - -
- 4663.79 4663.47 - 4663.79 4663.47 4667.40

New Branch - - - - - - - -
- - - - 4662.40 4661.95 -
MH 4-3 - - - - - - - -
- 4662.40 4661.95 - 4662.40 4661.95 4671.99
P 4-7 18 1.14 22.03 4.96 0.28 0.39 0.38 -

4668.32 4667.48 4667.10 - 4667.88 4667.50 -
CB 4-5 - - - - - - - -
- 4667.88 4667.50 - 4667.88 4667.50 4671.90
Future connection 5 18 0.47 7.68 2.98 0.22 0.25 0.14
- 4668.73 4667.64 4667.50 - 4667.66 4667.52 -

New Branch - - - - - - - -
- - - - 4662.40 4661.95 -
MH 4-3 - - - - - - - -
- 4662.40 4661.95 - 4662.40 4661.95 4671.99
P 4-8 18 0.67 64.25 4.24 0.22 0.30 0.28 -
4667.89 4666.88 4666.60 - 4668.13 4667.85 -
CB 4-6 - - - - - - - -
- 4668.13 4667.85 - 4668.13 4667.85 4671.84

New Branch - - - - - - - -
- - - - 4667.04 4666.63 -
MH 5-3 - - - - - - - -
- 4667.04 4666.63 - 4667.04 4666.63 4672.41
P 5-3 18 1.49 21.82 5.37 0.32 0.45 0.45 -
4668.84 4668.10 4667.66 - 4668.50 4668.05 -
CB 5-1 - - - - - - - -
- 4668.50 4668.05 - 4668.50 4668.05 4672.30
Future connection 6 18 0.89 10.55 3.61 0.30 0.35 0.20
- 4669.35 4668.34 4668.14 - 4668.45 4668.25 -

New Branch - - - - - - - -
- - - - 4667.04 4666.63 -
MH 5-3 - - - - - - - -
- 4667.04 4666.63 - 4667.04 4666.63 4672.41
P 5-4 18 0.59 64.20 4.06 0.20 0.28 0.26 -
4668.44 4667.40 4667.14 - 4668.64 4668.39 -
CB 5-2 - - - - - - - -
- 4668.64 4668.39 - 4668.64 4668.39 4672.30

New Branch - - - - - - - -
- - - - 4667.78 4667.47 -
MH 5-4 - - - - - - - -
- 4667.78 4667.47 - 4667.78 4667.47 4671.82
P 5-9 18 1.33 64.07 4.07 0.36 0.43 0.26 -
4668.42 4667.73 4667.47 - 4668.15 4667.90 -
CB 5-6 - - - - - - - -
- 4668.15 4667.90 - 4668.15 4667.90 4671.72

Table B:

LOSSES _ _ _ _ _ _ _
-|LOSS_COEFFICENTS

```
    Str_ID              Hf      Hb    Hstr      Hc      He      Hj    Total |
Dstr     Ko      CD      Cd       Cq      Cp      Cb      K

  Outfall               -       -       -       -       -       -       -   |      -
     -       -       -       -       -       -       -
    City pipe 1       0.31     -       -       -       -       -      0.31 |      -
     -       -       -       -       -       -       -
    City MH             -       -      0.07     -       -       -      0.07 |
2.01   0.263   1.000   0.438   1.000   1.000   1.000   0.115
    City pipe 2         -       -       -       -       -       -  SuperCrt |      -
     -       -       -       -       -       -       -
    MH 1-1              -       -       -       -       -       -       -   |      -
     -       -       -       -       -       -       -
    P 1-1               -       -       -       -       -       -  SuperCrt |      -
     -       -       -       -       -       -       -
    MH 1-2              -       -       -       -       -       -       -   |      -
     -       -       -       -       -       -       -
    P 1-2               -       -       -       -       -       -  SuperCrt |      -
     -       -       -       -       -       -       -
    MH 1-3              -       -       -       -       -       -       -   |      -
     -       -       -       -       -       -       -
    P 1-5               -       -       -       -       -       -  SuperCrt |      -
     -       -       -       -       -       -       -
    MH 1-4              -       -       -       -       -       -       -   |      -
     -       -       -       -       -       -       -
    P 1-11              -       -       -       -       -       -  SuperCrt |      -
     -       -       -       -       -       -       -
    MH 2-1              -       -       -       -       -       -       -   |      -
     -       -       -       -       -       -       -
    P 2-3               -       -       -       -       -       -  SuperCrt |      -
     -       -       -       -       -       -       -
    MH 2-2              -       -       -       -       -       -       -   |      -
     -       -       -       -       -       -       -
    P 2-6               -       -       -       -       -       -  SuperCrt |      -
     -       -       -       -       -       -       -
    MH 2-3              -       -       -       -       -       -       -   |      -
     -       -       -       -       -       -       -
    P 2-9               -       -       -       -       -       -  SuperCrt |      -
     -       -       -       -       -       -       -
    MH 3-1              -       -      0.07     -       -       -      0.07 |
1.21   0.305   1.000   0.324   1.209   1.000   1.000   0.120
    P 3-3             1.04      -       -       -       -       -      1.04 |      -
     -       -       -       -       -       -       -
    MH 3-2              -       -      0.12     -       -       -      0.12 |
1.64   0.458   1.000   0.444   1.184   1.000   1.000   0.241
    P 3-9             0.24      -       -       -       -       -      0.24 |      -
     -       -       -       -       -       -       -
    MH 3-3              -       -      0.03     -       -       -      0.03 |
1.68   0.455   1.000   0.451   1.102   1.000   1.000   0.226
    P 3-13            1.41      -       -       -       -       -      1.41 |      -
```

- - - - - - -
MH 4-1 - - 0.15 - - - 0.15 |
1.40 0.623 1.000 0.479 1.191 1.000 1.000 0.356
P 4-3 1.18 - - - - - 1.18 | -
- - - - - - -
MH 4-2 - - - - - - - |
- - - - - - -
P 4-6 - - - - - - SuperCrt | -
- - - - - - -
MH 4-3 - - - - - - - |
- - - - - - -
P 4-9 - - - - - - SuperCrt | -
- - - - - - -
MH 5-1 - - - - - - - |
- - - - - - -
P 5-1 - - - - - - SuperCrt | -
- - - - - - -
MH 5-2 - - - - - - - |
- - - - - - -
P 5-2 - - - - - - SuperCrt | -
- - - - - - -
MH 5-3 - - - - - - - |
- - - - - - -
P 5-5 - - - - - - SuperCrt | -
- - - - - - -
MH 5-4 - - - - - - - |
- - - - - - -
P 5-8 - - - - - - SuperCrt | -
- - - - - - -
CB 5-5 - - - - - - - |
0.36 - - - - - - -

New Branch - - - - - - - | -
- - - - - - -
MH 1-3 - - - - - - - |
- - - - - - -
P 1-3 - - - - - - SuperCrt | -
- - - - - - -
CB 1-1 - - - - - - - | -
- - - - - - -
Future connection 1 - - - - - - SuperCrt |
- - - - - - - -

New Branch - - - - - - - | -
- - - - - - -
MH 1-3 - - - - - - - |
- - - - - - -
P 1-4 - - - - - - SuperCrt | -
- - - - - - -
CB 1-2 - - - - - - - |

0.19 - - - - - - -

New Branch - - - - - - - | -
- - - - - - -
MH 1-4 - - - - - - - | -
- - - - - - -
P 1-9 - - - - - - SuperCrt | -
- - - - - - -
CB 1-6 - - - - - - - |
0.28 - - - - - - -

New Branch - - - - - - - | -
- - - - - - -
MH 1-4 - - - - - - - | -
- - - - - - -
P 1-8 - - - - - - SuperCrt | -
- - - - - - -
CB 1-5 - - - - - - - |
0.27 - - - - - - -

New Branch - - - - - - - | -
- - - - - - -
MH 2-1 - - - - - - - | -
- - - - - - -
P 2-1 - - - - - - SuperCrt | -
- - - - - - -
CB 2-1 - - - - - - - |
0.21 - - - - - - -

New Branch - - - - - - - | -
- - - - - - -
MH 2-1 - - - - - - - | -
- - - - - - -
P 2-2 - - - - - - SuperCrt | -
- - - - - - -
CB 2-2 - - - - - - - |
0.21 - - - - - - -

New Branch - - - - - - - | -
- - - - - - -
MH 2-2 - - - - - - - | -
- - - - - - -
P 2-4 - - - - - - SuperCrt | -
- - - - - - -
CB 2-3 - - - - - - - | -
- - - - - - -
Future connection 2 - - - - - - SuperCrt |
- - - - - - - -

New Branch - - - - - - - | -

- - - - - - -
MH 2-2 - - - - - - - |
- - - - - - -
P 2-5 - - - - - - SuperCrt |
- - - - - - -
CB 2-4 - - - - - - - |
0.21 - - - - - - -

New Branch - - - - - - - |
- - - - - - -
MH 2-3 - - - - - - - |
- - - - - - -
P 2-7 - - - - - - SuperCrt |
- - - - - - -
CB 2-5 - - - - - - - |
0.15 - - - - - - -

New Branch - - - - - - - |
- - - - - - -
MH 2-3 - - - - - - - |
- - - - - - -
P 2-8 - - - - - - SuperCrt |
- - - - - - -
CB 2-6 - - - - - - - |
0.15 - - - - - - -

New Branch - - - - - - - |
- - - - - - -
MH 3-1 - - - - - - - |
- - - - - - -
P 3-1 - - - - - - SuperCrt |
- - - - - - -
CB 3-1 - - - - - - - |
- - - - - - -
Future connection 3 - - - - - - SuperCrt |
- - - - - - - -

New Branch - - - - - - - |
- - - - - - -
MH 3-1 - - - - - - - |
- - - - - - -
P 3-2 - - - - - - SuperCrt |
- - - - - - -
CB 3-2 - - - - - - - |
0.17 - - - - - - -

New Branch - - - - - - - |
- - - - - - -
MH 3-2 - - 0.04 - - - 0.04 |
1.64 1.599 1.000 0.444 0.103 1.000 1.000 0.073

P 3-7 0.01 - - - - - 0.01 | -
- - - - - - -
CB 3-6 - - - - - - - |
1.25 - - - - - - -

New Branch - - - - - - - | -
- - - - - - -
MH 3-2 - - 0.03 - - - 0.03 |
1.64 1.603 1.000 0.444 0.094 1.000 1.000 0.067
P 3-6 0.00 - - - - - 0.00 | -
- - - - - - -
CB 3-5 - - - - - - - |
1.65 - - - - - - -

New Branch - - - - - - - | -
- - - - - - -
MH 3-3 - - 0.01 - - - 0.01 |
1.68 1.606 1.000 0.451 0.049 1.000 1.000 0.035
P 3-12 0.00 - - - - - 0.00 | -
- - - - - - -
CB 3-10 - - - - - - - |
0.97 - - - - - - -

New Branch - - - - - - - | -
- - - - - - -
MH 3-3 - - 0.01 - - - 0.01 |
1.68 1.606 1.000 0.451 0.048 1.000 1.000 0.034
P 3-11 0.00 - - - - - 0.00 | -
- - - - - - -
CB 3-9 - - - - - - - |
1.39 - - - - - - -

New Branch - - - - - - - | -
- - - - - - -
MH 4-1 - - 0.06 - - - 0.06 |
1.40 1.673 1.000 0.479 0.171 1.000 1.000 0.137
P 4-1 0.01 - - - - - 0.01 | -
- - - - - - -
CB 4-1 - - 0.00 - - - 0.00 |
1.38 0.213 1.000 0.476 1.000 1.000 1.000 0.102
Future connection 4 0.00 - - - - - 0.00 |
- - - - - - - -

New Branch - - - - - - - | -
- - - - - - -
MH 4-1 - - 0.02 - - - 0.02 |
1.40 1.673 1.000 0.479 0.071 1.000 1.000 0.057
P 4-2 0.00 - - - - - 0.00 | -
- - - - - - -
CB 4-2 - - - - - - - |

0.93 - - - - - - -

New Branch - - - - - - - | -
- - - - - - -
MH 4-2 - - - - - - - | -
- - - - - - -
P 4-4 - - - - - - SuperCrt | -
- - - - - - -
CB 4-3 - - - - - - - |
0.24 - - - - - - -

New Branch - - - - - - - | -
- - - - - - -
MH 4-2 - - - - - - - | -
- - - - - - -
P 4-5 - - - - - - SuperCrt | -
- - - - - - -
CB 4-4 - - - - - - - |
0.24 - - - - - - -

New Branch - - - - - - - | -
- - - - - - -
MH 4-3 - - - - - - - | -
- - - - - - -
P 4-7 - - - - - - SuperCrt | -
- - - - - - -
CB 4-5 - - - - - - - | -
- - - - - - -
Future connection 5 - - - - - - SuperCrt |
- - - - - - - -

New Branch - - - - - - - | -
- - - - - - -
MH 4-3 - - - - - - - | -
- - - - - - -
P 4-8 - - - - - - SuperCrt | -
- - - - - - -
CB 4-6 - - - - - - - |
0.22 - - - - - - -

New Branch - - - - - - - | -
- - - - - - -
MH 5-3 - - - - - - - | -
- - - - - - -
P 5-3 - - - - - - SuperCrt | -
- - - - - - -
CB 5-1 - - - - - - - | -
- - - - - - -
Future connection 6 - - - - - - SuperCrt |
- - - - - - - -

New Branch - - - - - - - | -
- - - - - - -
MH 5-3 - - - - - - - | -
- - - - - - -
P 5-4 - - - - - - SuperCrt | -
- - - - - - -
CB 5-2 - - - - - - - |
0.20 - - - - - - -

New Branch - - - - - - - | -
- - - - - - -
MH 5-4 - - - - - - - | -
- - - - - - -
P 5-9 - - - - - - SuperCrt | -
- - - - - - -
CB 5-6 - - - - - - - |
0.36 - - - - - - -

APPENDIX D

PIH DRAINAGE PLANS

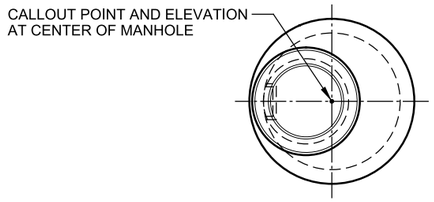

PLAN

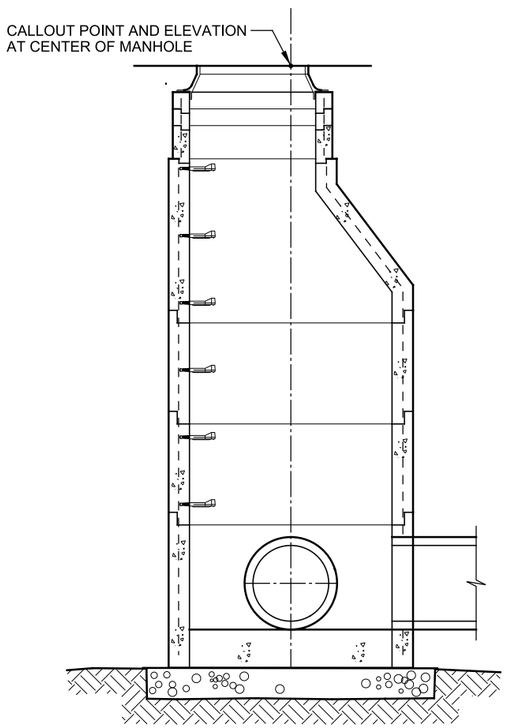

PROFILE

MANHOLE

CIRCULAR MANHOLE SHOWN, OTHER MANHOLES SIMILAR

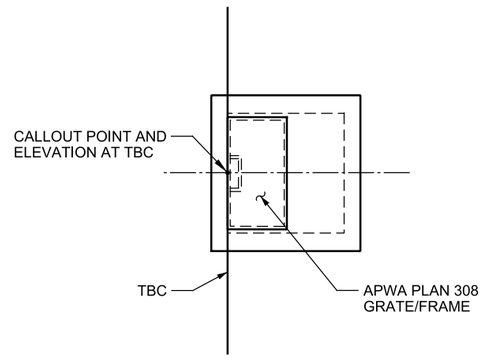

PLAN

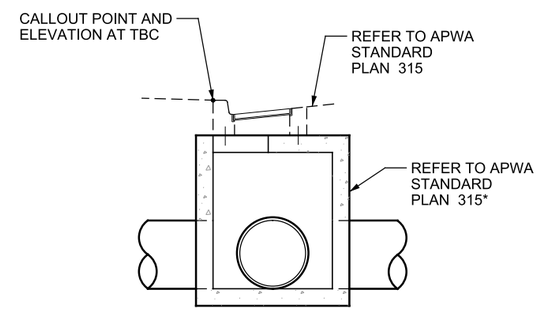

PROFILE

CATCH BASIN (315)

WITH PLAN 308 GRATE/FRAME
IN TYPE B1 CURB APPLICATIONS
*PLAN 315 SINGLE GRATE CATCH BASIN

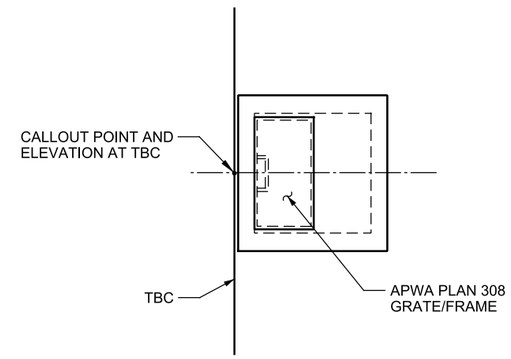

PLAN

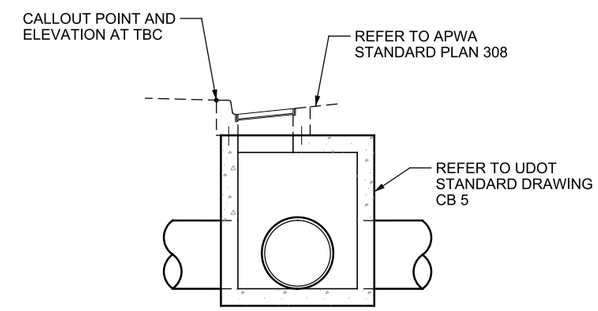

PROFILE

CATCH BASIN (CB 5 OR CB 9)

WITH PLAN 308 GRATE/FRAME
IN TYPE B1 CURB APPLICATIONS

NOTES:

1. MANHOLE AND DIVERSION BOX CALLOUT POINTS (STATION, OFFSET AND ELEVATION) REFER TO THE CENTER OF MANHOLE/DIVERSION BOX.
2. CATCH BASIN CALLOUT POINTS (STATION, OFFSET AND ELEVATION) ARE TO TBC FOR CATCH BASINS AGAINST TYPE B1 CURB AND GUTTER.
3. ALIGN CATCH BASINS WITH THE CURB AND GUTTER WHICH THEY ARE PLACED AGAINST.
4. ORIENT MANHOLE RING AND COVERS SO AS TO BE IN CENTER OF TRAVEL LANE.
5. WHERE POSSIBLE, ADJUST FINISHED GRATE ELEVATION TO PROVIDE 2 INCH GUTTER DEPRESSION IN TYPE B1 CURB AND GUTTER PER UDOT STANDARD DRAWING CB 1.

DRAINAGE STRUCTURE PLACEMENT DETAIL

THIS DETAIL SHOWS DRAINAGE STRUCTURE PLACEMENT FOR CALLOUT POINTS GIVEN IN PLANS, IN REFERENCE TO BARRIER, CURB AND GUTTER, DITCH FLOW LINES, AND FINISHED SURFACE. REFER TO UDOT STD DRAWINGS OR APWA STANDARD PLANS, AS NOTED, FOR ACTUAL BOX, MANHOLE, CURB AND GUTTER, AND OTHER DETAILS.

PRELIMINARY
NOT FOR CONSTRUCTION

UTAH DEPARTMENT OF TRANSPORTATION
HORROCKS ENGINEERS

DRAWN BY KKH
QC CHECKED BY JEO
MM/DD/YY DATE
APPROVED
PROFESSIONAL ENGINEER

PROJECT: 4150 WEST FROM MAJESTIC RISE
PARKWAY TO 12600 SOUTH
PROJECT NUMBER: F-LC35(316) PIN 15913
DRAINAGE DETAIL
SHEET NO. DRDT-01

35 1/2" Grate and frame

1. **GENERAL**
   A. The grate and frame fits concrete boxes in Plan 315.

2. **PRODUCTS**
   A. Castings: Grey iron class 35 minimum per ASTM A 48, coated with asphalt based paint or better.
   B. Bolts, Nuts, Washers, Accessories: Stainless steel, APWA Section 05 05 23.

3. **EXECUTION** (Not used)

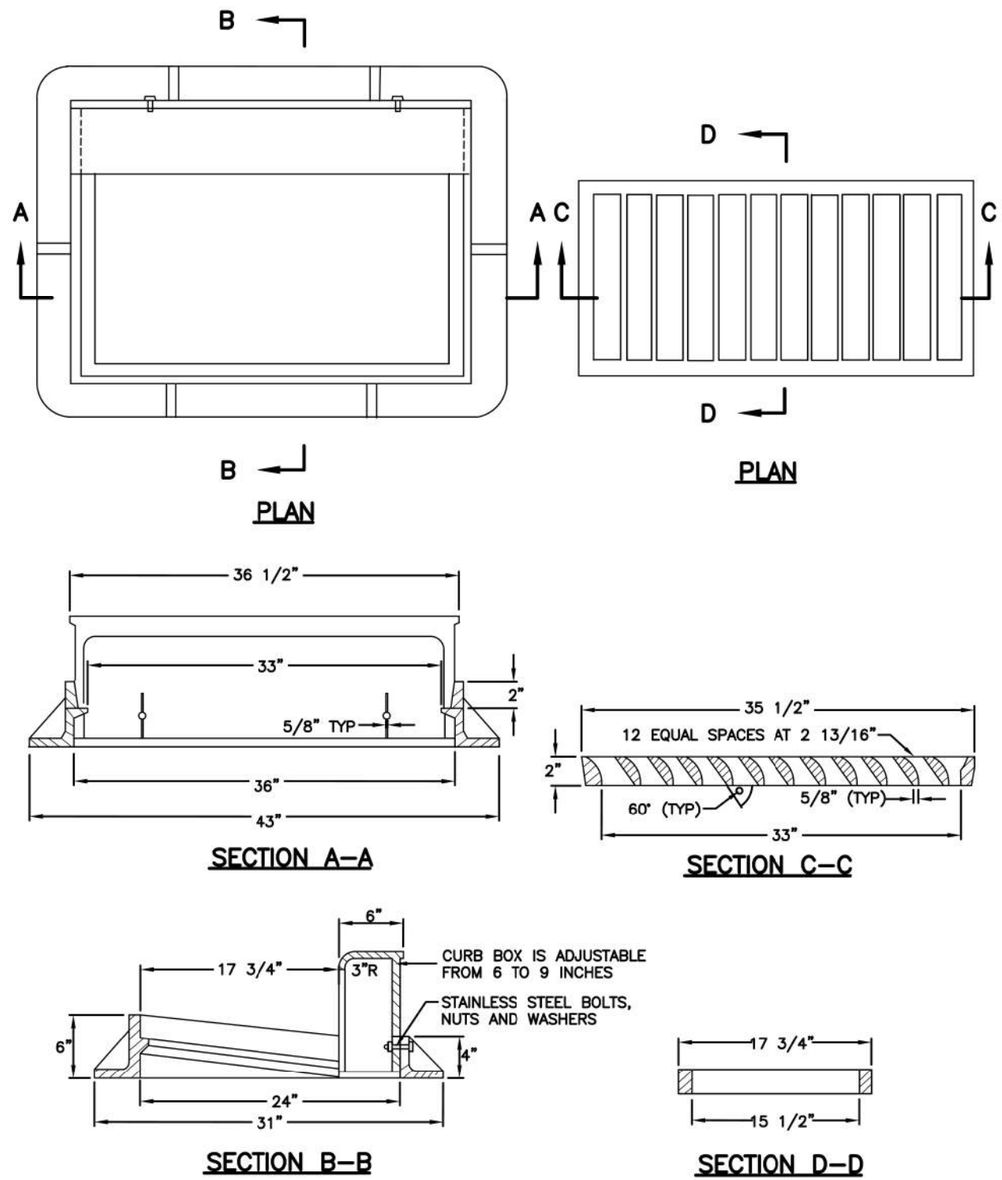

35 1/2" Grate and frame

Plan **308**

PRELIMINARY
NOT FOR CONSTRUCTION

UTAH DEPARTMENT OF TRANSPORTATION
HORROCKS ENGINEERS

DRAWN BY APWA
QC CHECKED BY JEO
MM/DD/YY DATE
APPROVED
PROFESSIONAL ENGINEER

4150 WEST FROM MAJESTIC RISE
PARKWAY TO 12600 SOUTH
PIN 15913
F-LC35(316)
DRAINAGE DETAIL

PROJECT
PROJECT NUMBER
SHEET NO. DRDT-02

Catch basin

1. **GENERAL**
   A. The drawing shows typical pipe connections. Refer to construction drawings for connection locations or refer to field location of existing piping when engineering pipe connection to the box.

2. **PRODUCTS**
   A. Base Course: Untreated base course, APWA Section 32 11 23. Do not use gravel as a base course without ENGINEER's permission.
   B. Backfill: Common fill, APWA Section 31 05 13. Maximum particle size 2-inches.
   C. Concrete: Class 4000, APWA Section 03 30 04.
   D. Reinforcement: Deformed, 60 ksi yield grade steel, ASTM A 615.

3. **EXECUTION**
   A. Base Course Placement: APWA Section 32 11 23. Maximum lift thickness is 8-inches before compaction. Compaction is 95 percent or greater relative to a modified proctor density, APWA Section 31 23 26.
   B. Curb Face Opening: Make opening at least 4-inches high. Provide at least a 2-inch drop between the "warp line" in the gutter flow-line and the top of the grate at the curb face opening.
   C. Concrete Placement: APWA Section 03 30 10. Provide 1/2-inch radius edges. Apply a broom finish. Apply a curing agent.
   D. Backfill: Place backfill against the basin wall. Pea gravel and recycled RAP aggregate is NOT ALLOWED. Water jetting is NOT allowed. Maximum lift thickness is 8-inches before compaction. Compaction is 95 percent or greater relative to a standard proctor density, APWA Section 31 23 26.

SINGLE GRATE

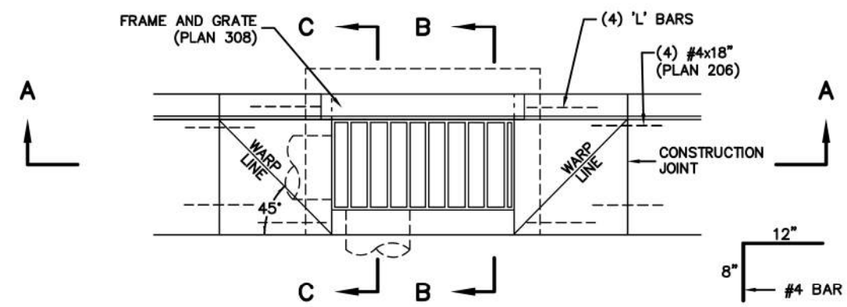

PLAN

"L" BAR DETAIL

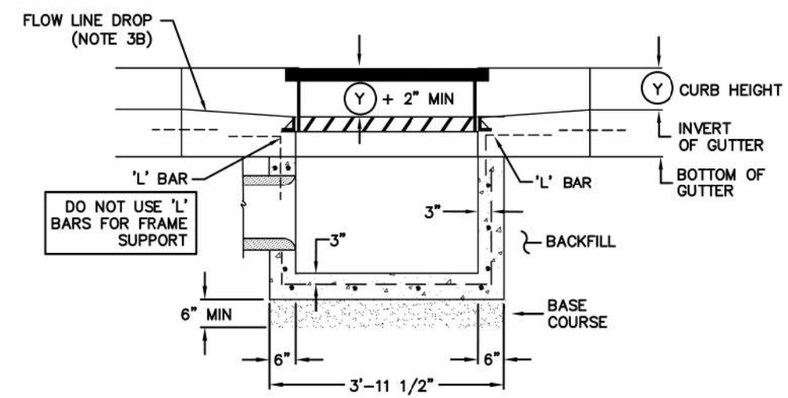

SECTION A–A

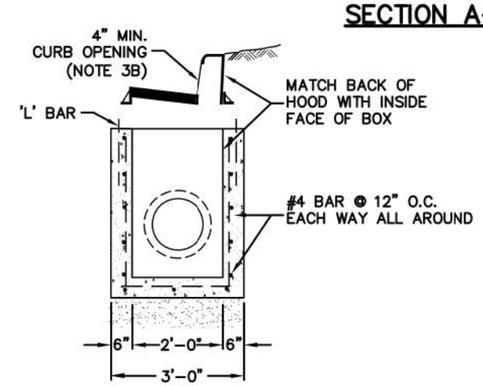

SECTION B–B

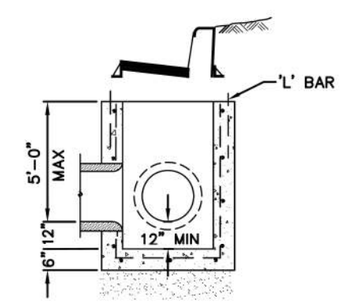

SECTION C–C

Catch basin

PRELIMINARY
NOT FOR CONSTRUCTION

UTAH DEPARTMENT OF TRANSPORTATION
HORROCKS ENGINEERS

DRAWN BY APWA
QC CHECKED BY JEO
MM/DD/YY DATE
APPROVED
PROFESSIONAL ENGINEER

4150 WEST FROM MAJESTIC RISE
PARKWAY TO 12600 SOUTH
PROJECT
PIN 15913
PROJECT NUMBER F-LC35(316)
DRAINAGE DETAIL
SHEET NO. DRDT-03

Precast manhole

1. **GENERAL**
   A. The drawing shows typical pipe connections. Refer to construction drawings for connection locations or refer to field location of existing piping when engineering pipe connection to the manhole.
   B. Manhole size.
      1) Diameter is 4-feet: For pipe under 12" diameter.
      2) Diameter is 5-feet: For pipe 12" and larger, or when 3 or more drain pipes intersect the manhole.
   C. Wall thickness:
      1) Precast reinforced concrete walls 4 3/4" minimum.
      2) Cast-in-place concrete to be 8 inches thick minimum.

2. **PRODUCTS**
   A. Base Course: Untreated base course, APWA Section 32 11 23. Do not use gravel as a base course without ENGINEER's permission.
   B. Backfill: Common fill, APWA Section 31 05 13. Maximum particle size 2-inches.
   C. Concrete: Class 4000, APWA Section 03 30 04.
   D. Riser and Reducing Riser: ASTM C 478.
   E. Joint Sealant: Rubber based, compressible.
   F. Grout: 2 parts sand to 1 part cement mortar, ASTM C 1329.
   G. Stabilization-Separation Geotextile: Moderate or high at CONTRACTOR's choice, APWA Section 31 05 19.

3. **EXECUTION**
   A. Foundation Stabilization: Get ENGINEER's permission to use a sewer rock or a sewer rock in a geotextile wrap to stabilize an unstable foundation.
   B. Base Course Placement: APWA Section 32 11 23. Maximum lift thickness is 8-inches before compaction. Compaction is 95 percent or greater relative to a modified proctor density, APWA Section 31 23 26.
   C. Invert cover. During construction, place invert covers over the top of pipe in manholes that currently convey sewerage. See Plan 412.
   D. Concrete Deck or Reducing Riser: When depth of manhole from pipe invert to finish grade exceeds 7 feet, use an ASTM C 478 reducing riser.
   E. Pipe Connections: Grout around all pipe openings.
   F. Pipe Seal: Install rubber-based pipe seals on all plastic pipes when connecting plastic pipes to manholes. Hold water-stop in place with stainless steel bands.
   G. Joints: Place flexible sealant in all riser joints. Finish with grout.
   H. Adjustment: If the required manhole adjustment is more than 1'-0", remove the cone and grade rings and adjust the manhole elevation with the appropriate manhole section, the cone section, and the grade rings or plastic form to make frame and lid match finish grade.
   I. Finish: Provide smooth and neat finishes on interior of cones, shafts, and rings. Imperfect moldings or honeycombs will not be accepted.
   J. Backfill: Provide backfill against the manhole shaft. Pea gravel and recycled RAP aggregate is NOT ALLOWED. Water jetting is NOT allowed. Maximum lift thickness is 8-inches before compaction. Compaction is 95 percent or greater relative to a standard proctor density, APWA Section 31 23 26.

CAST IN PLACE BASE

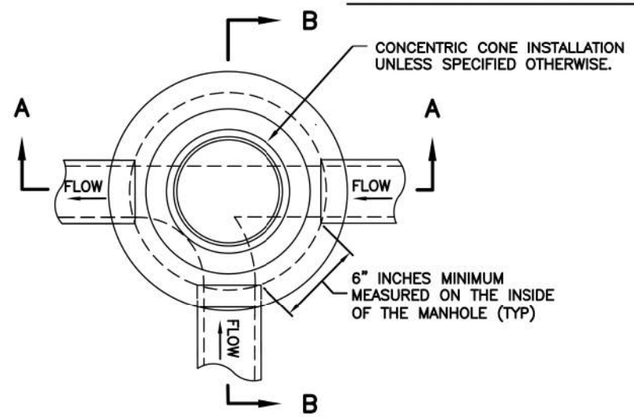

PLAN

TABLE OF DIMENSIONS	
MANHOLE STYLE	DIMENSION
A	(X)=48" (Y)=30"
B	(X)=60" (Y)=44"
C	(X)=60" (Y)=30"

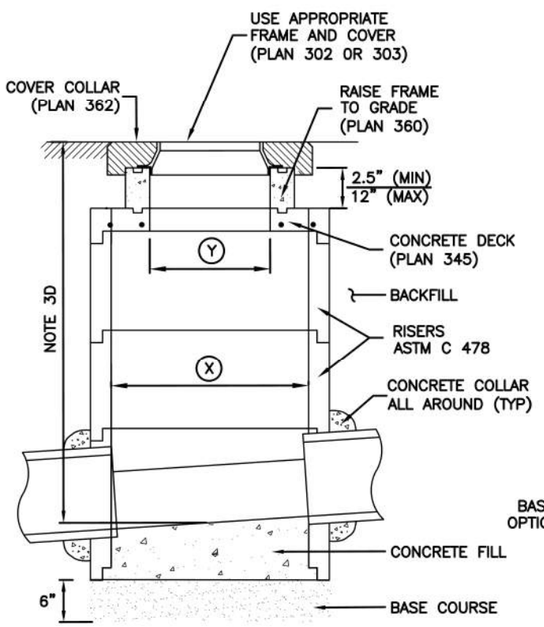

SECTION A–A
(CONCRETE DECK OPTION)

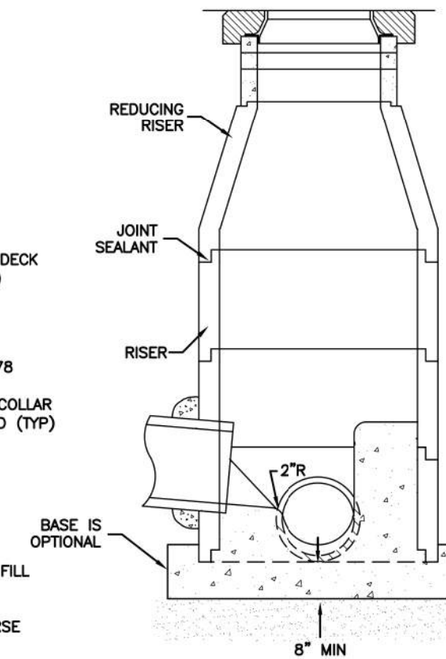

SECTION B–B
(REDUCING RISER OPTION)

November 2010

Precast manhole

Plan
341
Sheet 1 of 2

PRELIMINARY
NOT FOR CONSTRUCTION

UTAH DEPARTMENT OF TRANSPORTATION
HORROCKS ENGINEERS

DRAWN BY APWA
QC CHECKED BY JEO
MM/DD/YY DATE
APPROVED
PROFESSIONAL ENGINEER

4150 WEST FROM MAJESTIC RISE
PARKWAY TO 12600 SOUTH
F-LC35(316)
PIN 15913
DRAINAGE DETAIL

PROJECT
PROJECT NUMBER
SHEET NO. DRDT-04

11/5/2019 9:30:12 AM pw:\\pw.horrocks.com\PWPrimary\Documents\Projects\2019\UT-1926-1909 4150 W Majestic Rise Pkwy to 12600 S\15913\Sheet_Files\Hydraulics\15913_DRDT-04.dgn

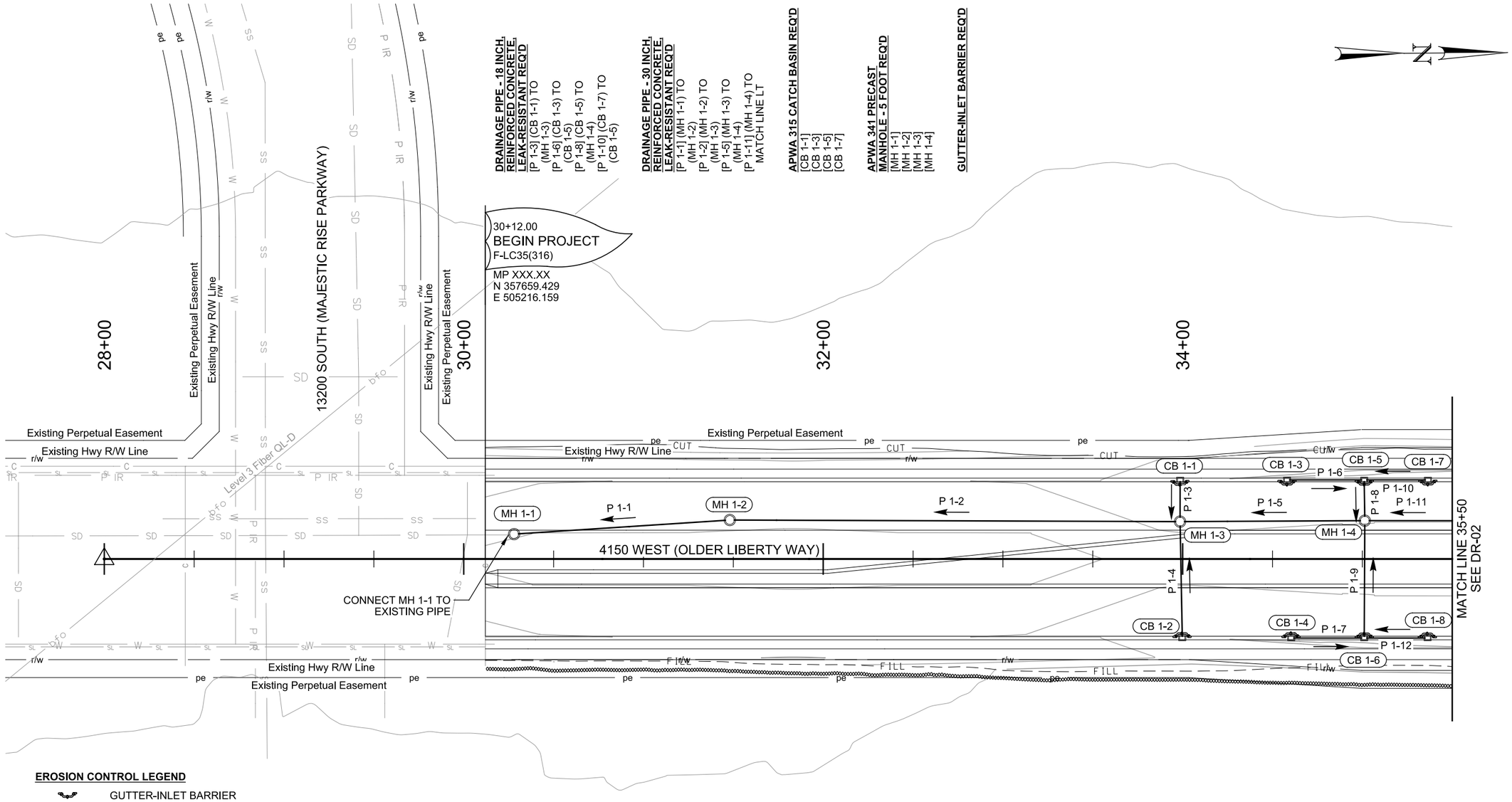

EROSION CONTROL LEGEND

GUTTER-INLET BARRIER

SILT FENCE

GENERAL DRAINAGE NOTES

1. UTILITY LOCATIONS SHOWN ARE APPROXIMATE BASED ON THE BEST AVAILABLE INFORMATION. CONTRACTOR IS RESPONSIBLE TO LOCATE ALL UTILITIES PRIOR TO EXCAVATION.
2. CROSS-SECTIONS ARE PROVIDED FOR INFORMATION ONLY TO ASSIST IN PIPE INSTALLATION. CONTRACTOR TO VERIFY UTILITY LOCATIONS.
3. PROTECT IN PLACE ALL UTILITIES AND EXISTING DRAINAGE FEATURES NOT BEING RELOCATED.
4. MAINTAIN AND KEEP EXISTING STORM DRAINAGE FEATURES OPERATIONAL AS NEEDED TO CONVEY DRAINAGE DURING CONSTRUCTION.
5. STRUCTURE ID:
   CB = CATCH BASIN
   MH = MANHOLE
   P = DRAINAGE PIPE
   EX = EXISTING
6. USE A COMBINATION OPEN CURB AND GRATE FOR ALL CATCH BASINS. SEE APWA PLAN 308 ON DRDT-02.

DRAINAGE PIPE - 18 INCH, REINFORCED CONCRETE, LEAK-RESISTANT REQ'D
[P 1-4] (CB 1-2) TO (MH 1-3)
[P 1-7] (CB 1-4) TO (CB 1-6)
[P 1-9] (CB 1-6) TO (MH 1-4)
[P 1-12] (CB 1-8) TO (CB 1-6)

APWA 315 CATCH BASIN REQ'D
[CB 1-2]
[CB 1-4]
[CB 1-6]
[CB 1-8]

GUTTER-INLET BARRIER REQ'D

SILT FENCE

PRELIMINARY
NOT FOR CONSTRUCTION

UTAH DEPARTMENT OF TRANSPORTATION
HORROCKS ENGINEERS

DRAWN BY	KKH
QC CHECKED BY	JEO
MM/DD/YY DATE	
APPROVED	
PROFESSIONAL ENGINEER	

PROJECT: 4150 WEST FROM MAJESTIC RISE PARKWAY TO 12600 SOUTH
PROJECT NUMBER: F-LC35(316) PIN 15913
DRAINAGE
SHEET NO. DR-01

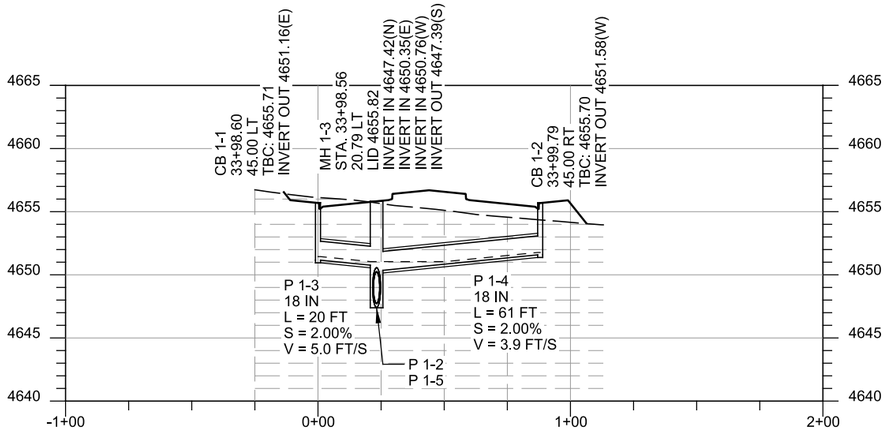

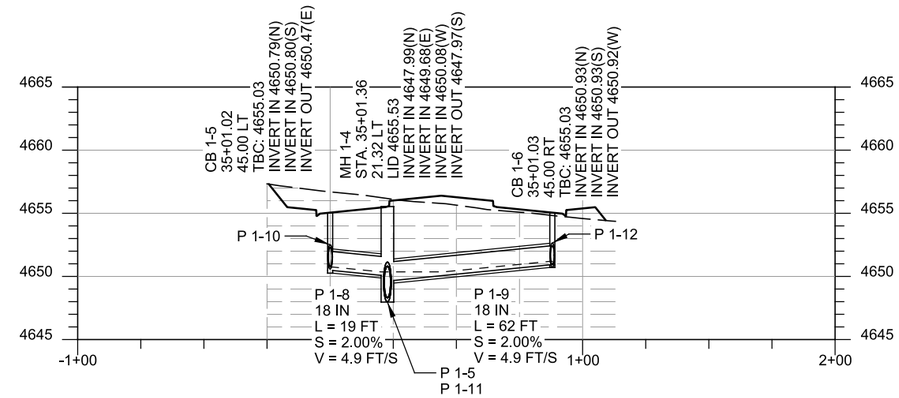

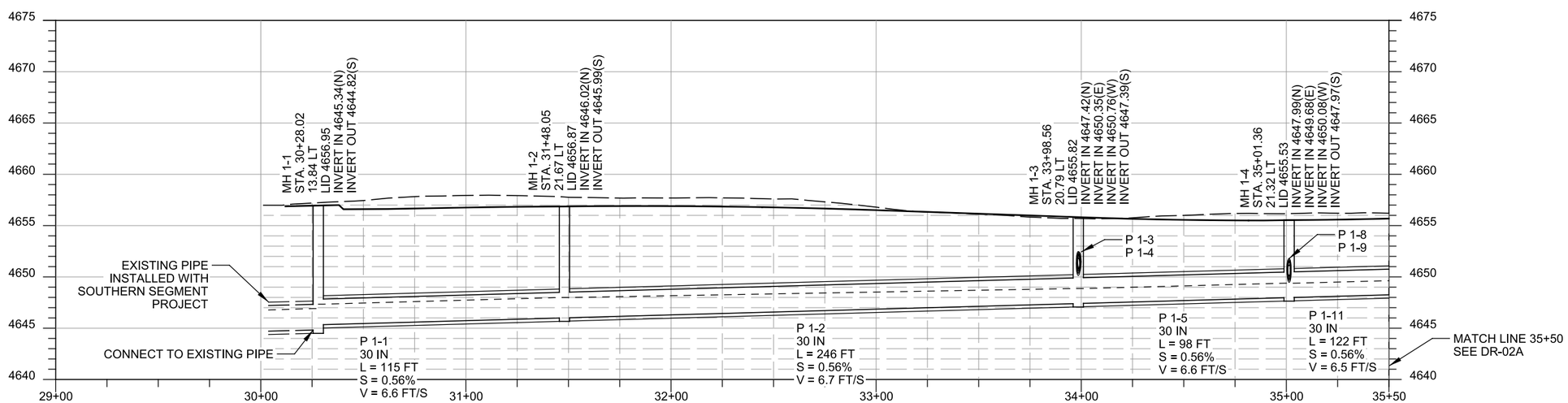

LEGEND:

FINISHED GRADE
Existing Grade
HGL 10-yr

NOTES:

1. SEE DR-01 FOR GENERAL DRAINAGE NOTES.

PRELIMINARY

NOT FOR CONSTRUCTION

UTAH DEPARTMENT OF TRANSPORTATION

HORROCKS ENGINEERS

APPROVED

PROFESSIONAL ENGINEER

MM/DD/YY
DATE

DRAWN BY KKH

QC CHECKED BY JEO

4150 WEST FROM MAJESTIC RISE

PARKWAY TO 12600 SOUTH

PROJECT

PROJECT NUMBER F-LC35(316) PIN 15913

DRAINAGE

SHEET NO. DR-01A

11/5/2019 9:30:27 AM pw:\\pw.horrocks.com:PWPrimary\Documents\Projects\2019\UT-1926-1909 4150 W Majestic Rise Pkwy to 12600 S\15913\Sheet_Files\Hydraulics\15913_DR-01A.dgn

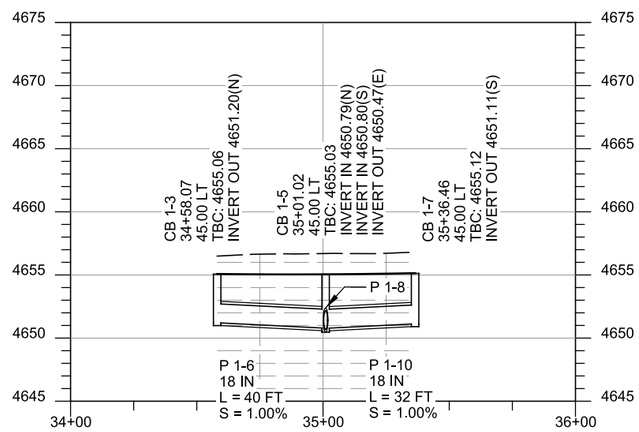

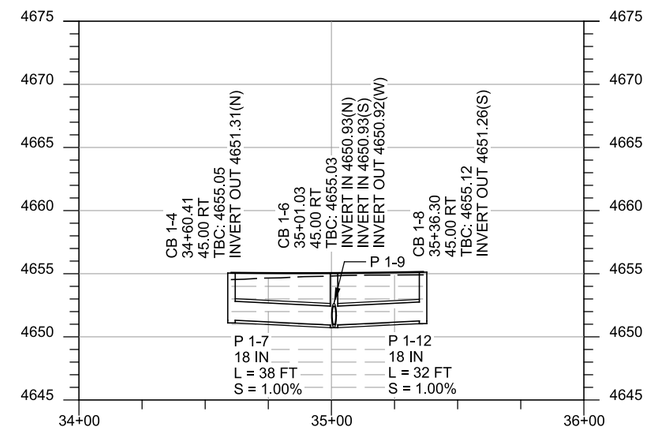

LEGEND:

- FINISHED GRADE
- Existing Grade
- HGL 10-yr

NOTES:

1. SEE DR-01 FOR GENERAL DRAINAGE NOTES.

PRELIMINARY

NOT FOR CONSTRUCTION

UTAH DEPARTMENT OF TRANSPORTATION

HORROCKS ENGINEERS

APPROVED

MM/DD/YY
DATE

DRAWN BY KKH

QC CHECKED BY JEO

PROFESSIONAL ENGINEER

PROJECT: 4150 WEST FROM MAJESTIC RISE
PARKWAY TO 12600 SOUTH

PROJECT NUMBER: F-LC35(316) PIN 15913

DRAINAGE

SHEET NO. DR-01B

EROSION CONTROL LEGEND

GUTTER-INLET BARRIER

SILT FENCE

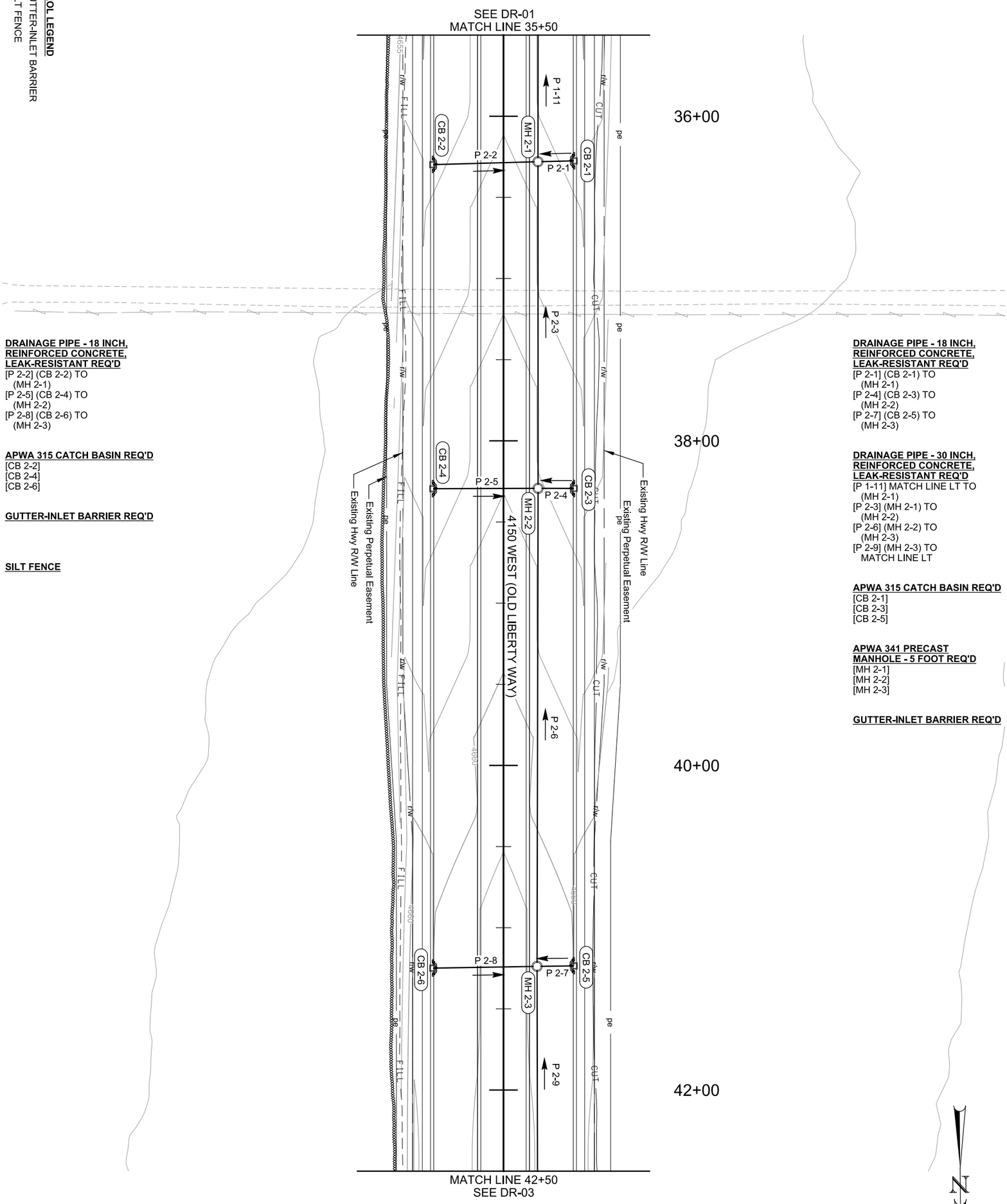

DRAINAGE PIPE - 18 INCH, REINFORCED CONCRETE, LEAK-RESISTANT REQ'D
[P 2-2] (CB 2-2) TO (MH 2-1)
[P 2-5] (CB 2-4) TO (MH 2-2)
[P 2-8] (CB 2-6) TO (MH 2-3)

APWA 315 CATCH BASIN REQ'D
[CB 2-2]
[CB 2-4]
[CB 2-6]

GUTTER-INLET BARRIER REQ'D

SILT FENCE

DRAINAGE PIPE - 18 INCH, REINFORCED CONCRETE, LEAK-RESISTANT REQ'D
[P 2-1] (CB 2-1) TO (MH 2-1)
[P 2-4] (CB 2-3) TO (MH 2-2)
[P 2-7] (CB 2-5) TO (MH 2-3)

DRAINAGE PIPE - 30 INCH, REINFORCED CONCRETE, LEAK-RESISTANT REQ'D
[P 1-11] MATCH LINE LT TO (MH 2-1)
[P 2-3] (MH 2-1) TO (MH 2-2)
[P 2-6] (MH 2-2) TO (MH 2-3)
[P 2-9] (MH 2-3) TO MATCH LINE LT

APWA 315 CATCH BASIN REQ'D
[CB 2-1]
[CB 2-3]
[CB 2-5]

APWA 341 PRECAST MANHOLE - 5 FOOT REQ'D
[MH 2-1]
[MH 2-2]
[MH 2-3]

GUTTER-INLET BARRIER REQ'D

SHEET NO. DR-02	PROJECT	4150 WEST FROM MAJESTIC RISE PARKWAY TO 12600 SOUTH	**UTAH DEPARTMENT OF TRANSPORTATION** HORROCKS ENGINEERS		**PRELIMINARY** NOT FOR CONSTRUCTION
	PROJECT NUMBER	F-LC35(316) PIN 15913	APPROVED ..... PROFESSIONAL ENGINEER	MM/DD/YY DATE	DRAWN BY KKH
	DRAINAGE				QC CHECKED BY JEO

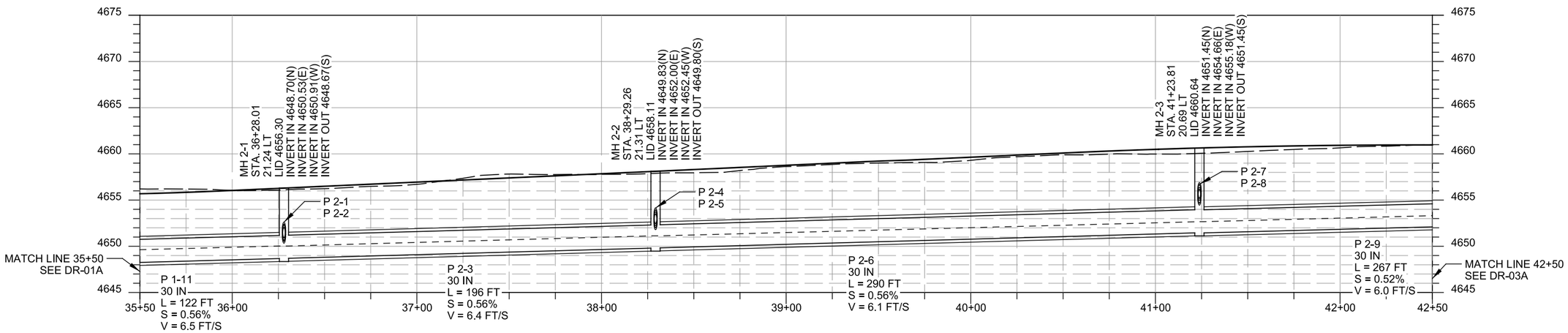

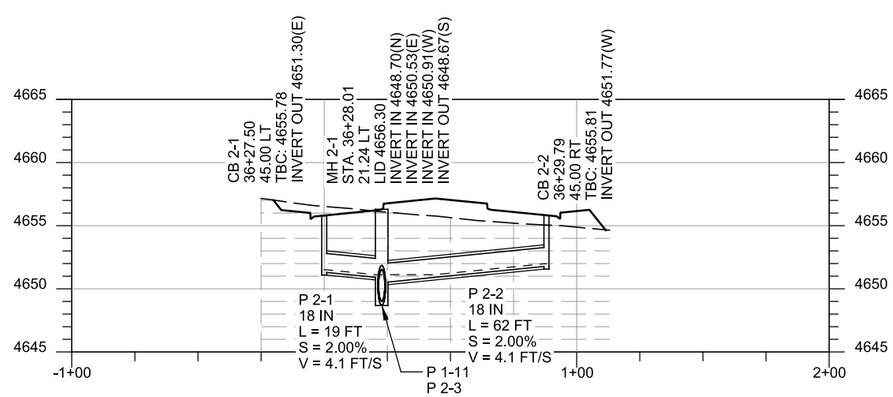

LEGEND:

- FINISHED GRADE
- Existing Grade
- HGL 10-yr

NOTES:

1. SEE DR-01 FOR GENERAL DRAINAGE NOTES.

PRELIMINARY
NOT FOR CONSTRUCTION

UTAH DEPARTMENT OF TRANSPORTATION
HORROCKS ENGINEERS

APPROVED

PROFESSIONAL ENGINEER

DRAWN BY	KKH
QC CHECKED BY	JEO
DATE	MM/DD/YY

PROJECT: 4150 WEST FROM MAJESTIC RISE
PARKWAY TO 12600 SOUTH

PROJECT NUMBER: F-LC35(316) PIN 15913

DRAINAGE

SHEET NO. DR-02A

11/5/2019 9:30:36 AM pw:\\pw.horrocks.com:PWPrimary\Documents\Projects\2019\UT-1926-1909 4150 W Majestic Rise Pkwy to 12600 S\15913\Sheet_Files\Hydraulics\15913_DR-02A.dgn

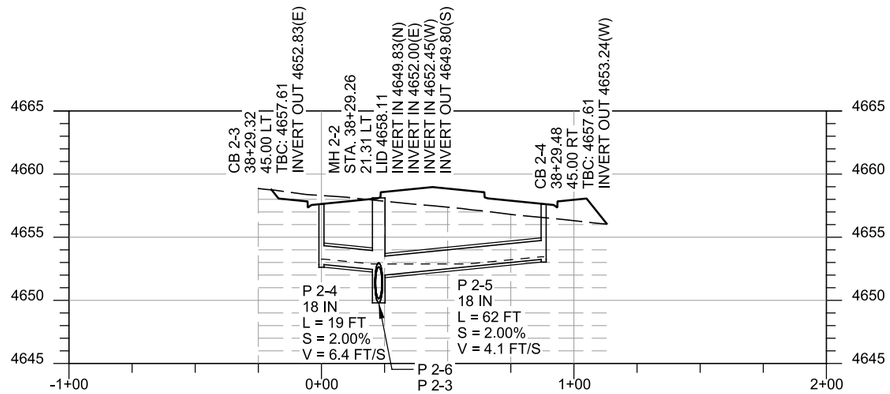

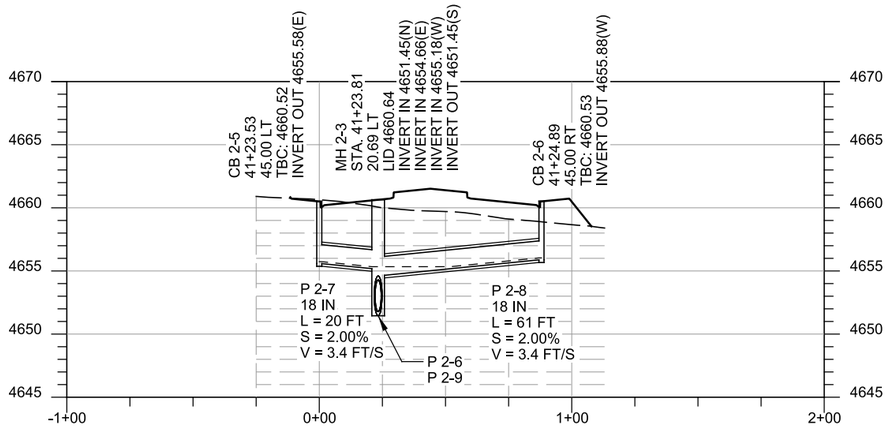

LEGEND:

- FINISHED GRADE
- Existing Grade
- HGL 10-yr

NOTES:

1. SEE DR-01 FOR GENERAL DRAINAGE NOTES.

PRELIMINARY
NOT FOR CONSTRUCTION

UTAH DEPARTMENT OF TRANSPORTATION
HORROCKS ENGINEERS

APPROVED

PROFESSIONAL ENGINEER

MM/DD/YY
DATE

DRAWN BY KKH
QC CHECKED BY JEO

PROJECT: 4150 WEST FROM MAJESTIC RISE
PARKWAY TO 12600 SOUTH

PROJECT NUMBER: F-LC35(316) PIN 15913

DRAINAGE

SHEET NO. DR-02B

11/5/2019 9:30:38 AM pw:\\pw.horrocks.com\PWPrimary\Documents\Projects\2019\UT-1926-1909 4150 W Majestic Rise Pkwy to 12600 S\15913\Sheet_Files\Hydraulics\15913_DR-02B.dgn

EROSION CONTROL LEGEND

GUTTER-INLET BARRIER

SILT FENCE

DRAINAGE PIPE - 18 INCH, REINFORCED CONCRETE, LEAK-RESISTANT REQ'D
[P 3-2] (CB 3-2) TO (MH 3-1)
[P 3-5] (CB 3-4) TO (CB 3-6)
[P 3-7] (CB 3-6) TO (CB 3-2)
[P 3-10] (CB 3-8) TO (CB 3-6)
[P 3-12] (CB 3-10) TO (MH 3-3)

APWA 315 CATCH BASIN REQ'D
[CB 3-2]
[CB 3-4]
[CB 3-6]
[CB 3-8]
[CB 3-10]

GUTTER-INLET BARRIER REQ'D

SILT FENCE

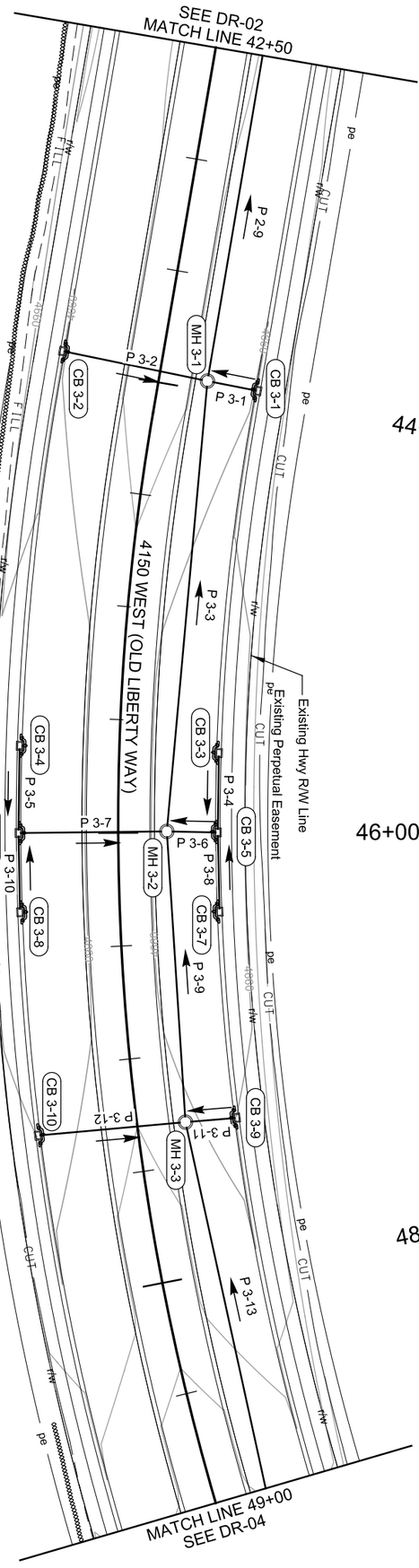

DRAINAGE PIPE - 18 INCH, REINFORCED CONCRETE, LEAK-RESISTANT REQ'D
[P 3-1] (CB 3-1) TO (MH 3-1)
[P 3-4] (CB 3-3) TO (CB 3-5)
[P 3-6] (CB 3-5) TO (MH 3-2)
[P 3-8] (CB 3-7) TO (CB 3-5)
[P 3-11] (CB 3-9) TO (MH 3-3)

DRAINAGE PIPE - 30 INCH, REINFORCED CONCRETE, LEAK-RESISTANT REQ'D
[P 2-9] MATCH LINE LT TO (MH 3-1)

DRAINAGE PIPE - 24 INCH, REINFORCED CONCRETE, LEAK-RESISTANT REQ'D
[P 3-3] (MH 3-1) TO (MH 3-2)
[P 3-9] (MH 3-2) TO (MH 3-3)
[P 3-13] (MH 3-3) TO MATCH LINE LT

APWA 315 CATCH BASIN REQ'D
[CB 3-1]
[CB 3-3]
[CB 3-5]
[CB 3-7]
[CB 3-9]

APWA 341 PRECAST MANHOLE - 5 FOOT REQ'D
[MH 3-1]
[MH 3-2]
[MH 3-3]

GUTTER-INLET BARRIER REQ'D

N

SHEET NO. DR-03	PROJECT	4150 WEST FROM MAJESTIC RISE	**UTAH DEPARTMENT OF TRANSPORTATION**	**PRELIMINARY**
		PARKWAY TO 12600 SOUTH	HORROCKS ENGINEERS	NOT FOR CONSTRUCTION
	PROJECT NUMBER	F-LC35(316) PIN 15913	APPROVED / PROFESSIONAL ENGINEER / MM/DD/YY DATE	DRAWN BY KKH / QC CHECKED BY JEO
		DRAINAGE		

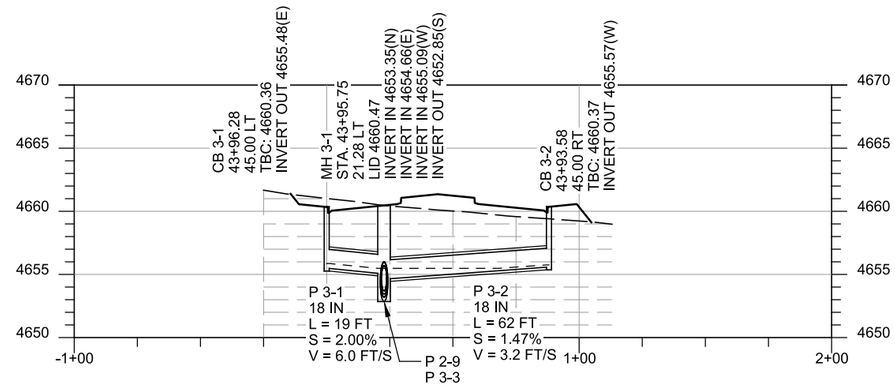

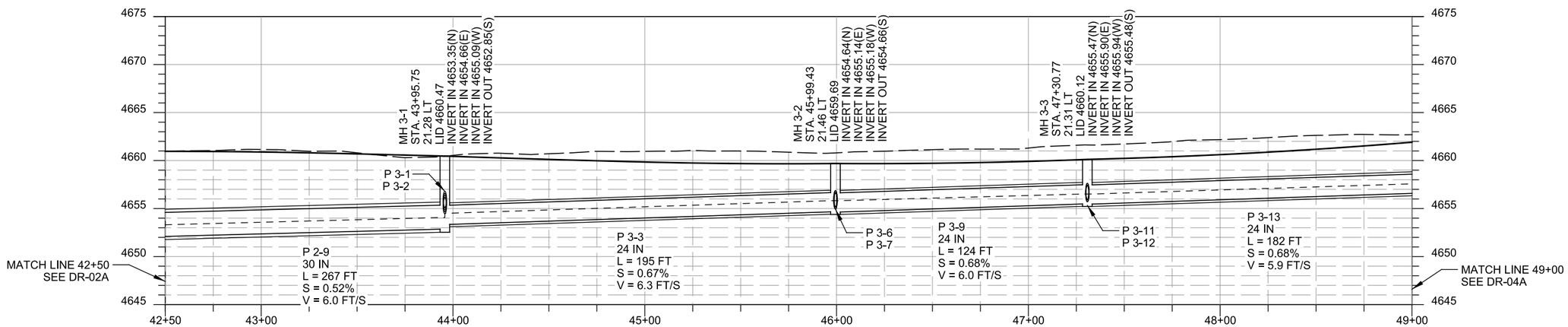

LEGEND:

- FINISHED GRADE
- Existing Grade
- HGL 10-yr

NOTES:

1. SEE DR-01 FOR GENERAL DRAINAGE NOTES.

PRELIMINARY
NOT FOR CONSTRUCTION

UTAH DEPARTMENT OF TRANSPORTATION
HORROCKS ENGINEERS

APPROVED	MM/DD/YY DATE	DRAWN BY KKH
PROFESSIONAL ENGINEER		QC CHECKED BY JEO

PROJECT: 4150 WEST FROM MAJESTIC RISE
PARKWAY TO 12600 SOUTH

PROJECT NUMBER: F-LC35(316) PIN 15913

DRAINAGE

SHEET NO. DR-03A

11/5/2019 9:30:45 AM pw:\\ow.horrocks.com:PWPrimary\Documents\Projects\2019\UT-1925-1909 4150 W Majestic Rise Pkwy to 12600 S\15913\Sheet_Files\Hydraulics\15913_DR-03A.dgn

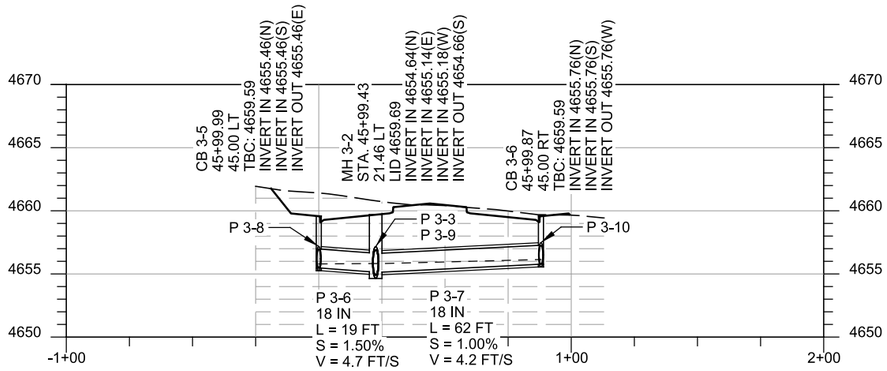

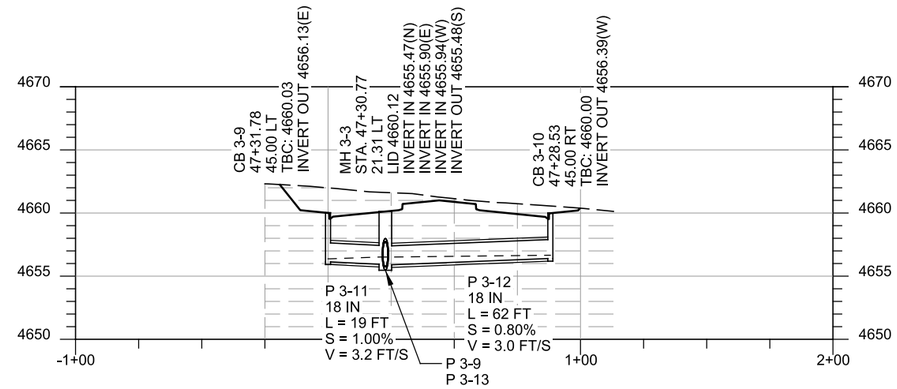

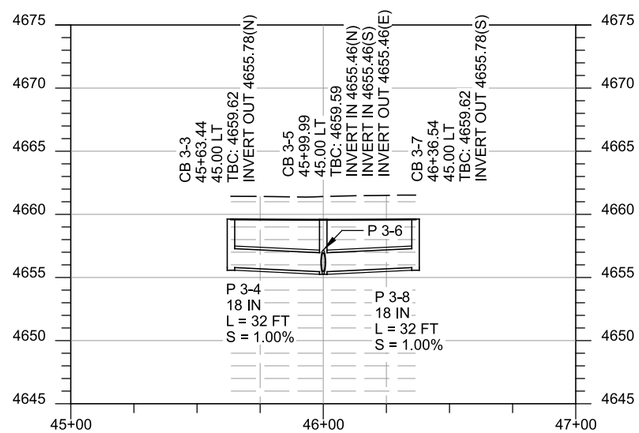

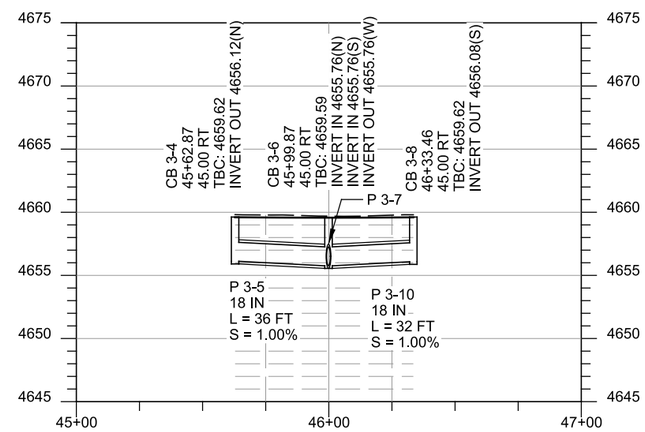

LEGEND:

- FINISHED GRADE
- Existing Grade
- HGL 10-yr

NOTES:

1. SEE DR-01 FOR GENERAL DRAINAGE NOTES.

PRELIMINARY
NOT FOR CONSTRUCTION

UTAH DEPARTMENT OF TRANSPORTATION
HORROCKS ENGINEERS

DRAWN BY	KKH
QC CHECKED BY	JEO

APPROVED
PROFESSIONAL ENGINEER
MM/DD/YY
DATE

PROJECT	4150 WEST FROM MAJESTIC RISE PARKWAY TO 12600 SOUTH
PROJECT NUMBER	F-LC35(316) PIN 15913
	DRAINAGE
SHEET NO.	DR-03B

EROSION CONTROL LEGEND

GUTTER-INLET BARRIER

SILT FENCE

DRAINAGE PIPE - 18 INCH, REINFORCED CONCRETE, LEAK-RESISTANT REQ'D
[P 4-2] (CB 4-2) TO (MH 4-1)
[P 4-5] (CB 4-4) TO (MH 4-2)
[P 4-8] (CB 4-6) TO (MH 4-3)

APWA 315 CATCH BASIN REQ'D
[CB 4-2]
[CB 4-4]
[CB 4-6]

GUTTER-INLET BARRIER REQ'D

SILT FENCE

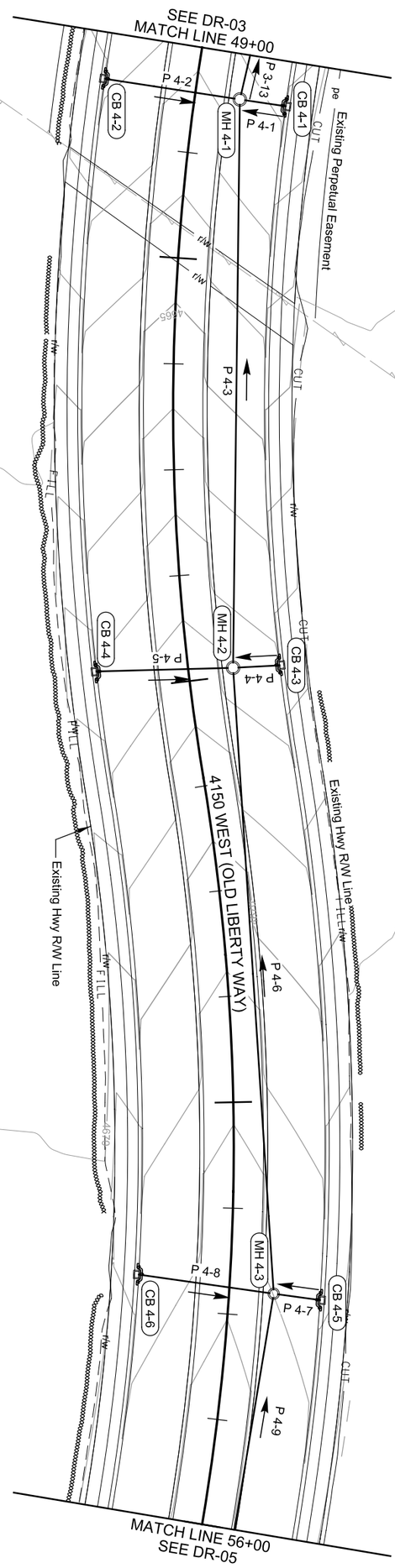

DRAINAGE PIPE - 18 INCH, REINFORCED CONCRETE, LEAK-RESISTANT REQ'D
[P 3-13] MATCH LINE LT (MH 4-1)
[P 4-1] (CB 4-1) TO (MH 4-1)
[P 4-4] (CB 4-3) TO (MH 4-2)
[P 4-6] (CB 4-2) TO (MH 4-3)
[P 4-7] (CB 4-5) TO (MH 4-3)
[P 4-9] (MH 4-3) TO MATCH LINE LT

DRAINAGE PIPE - 24 INCH, REINFORCED CONCRETE, LEAK-RESISTANT REQ'D
[P 4-3] (MH 4-1) TO (MH 4-2)

APWA 315 CATCH BASIN REQ'D
[CB 4-1]
[CB 4-3]
[CB 4-5]

APWA 341 PRECAST MANHOLE - 5 FOOT REQ'D
[MH 4-1]
[MH 4-2]

APWA 341 PRECAST MANHOLE - 4 FOOT REQ'D
[MH 4-3]

GUTTER-INLET BARRIER REQ'D

SILT FENCE

SHEET NO. DR-04	PROJECT	4150 WEST FROM MAJESTIC RISE PARKWAY TO 12600 SOUTH	**UTAH DEPARTMENT OF TRANSPORTATION** HORROCKS ENGINEERS		**PRELIMINARY** NOT FOR CONSTRUCTION
	PROJECT NUMBER	F-LC35(316) PIN 15913	APPROVED PROFESSIONAL ENGINEER	MM/DD/YY DATE	DRAWN BY KKH QC CHECKED BY JEO
		DRAINAGE			

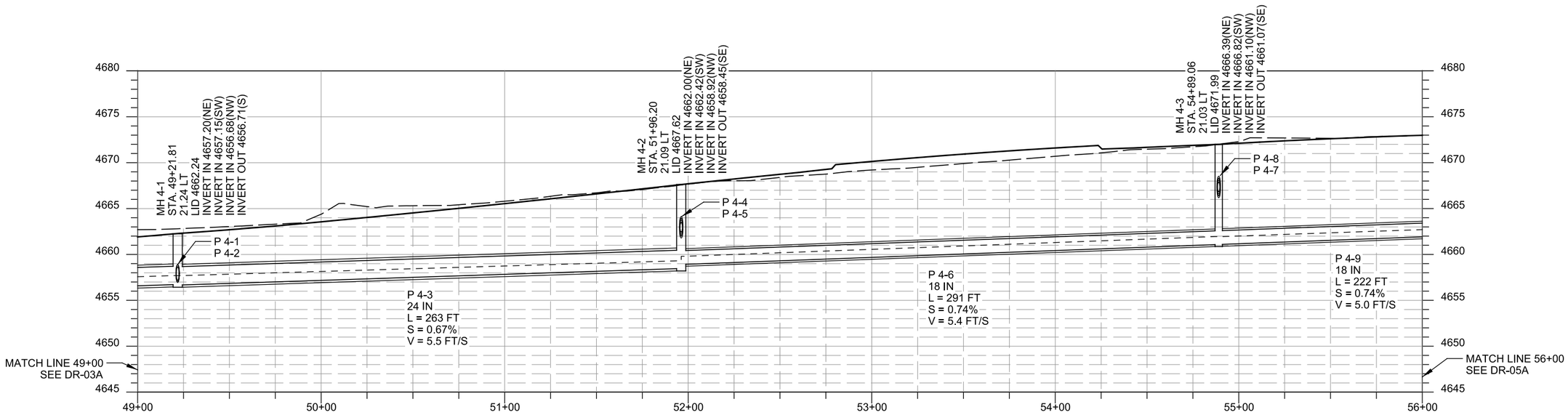

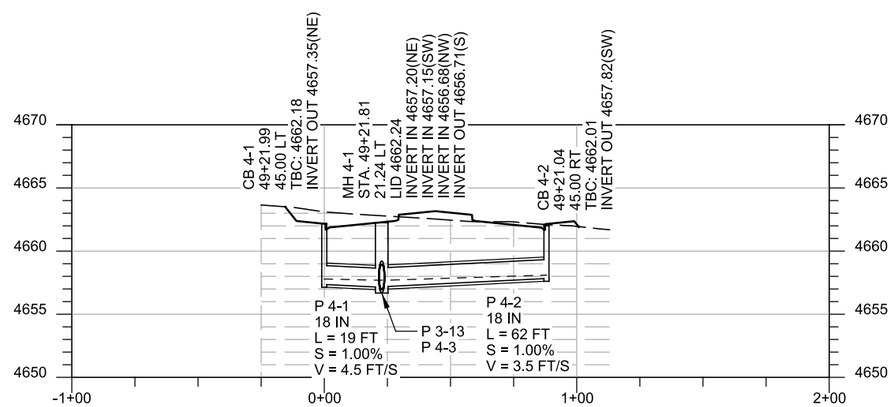

LEGEND:

FINISHED GRADE
Existing Grade
HGL 10-yr

NOTES:

1. SEE DR-01 FOR GENERAL DRAINAGE NOTES.

PRELIMINARY
NOT FOR CONSTRUCTION

UTAH DEPARTMENT OF TRANSPORTATION
HORROCKS ENGINEERS

DRAWN BY KKH
QC CHECKED BY JEO
MM/DD/YY DATE
APPROVED
PROFESSIONAL ENGINEER

4150 WEST FROM MAJESTIC RISE
PARKWAY TO 12600 SOUTH
PROJECT
PROJECT NUMBER F-LC35(316) PIN 15913
DRAINAGE
SHEET NO. DR-04A

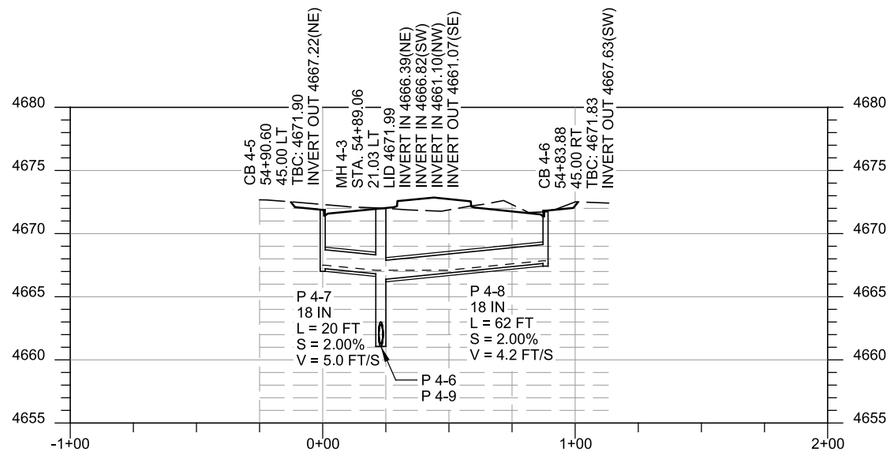

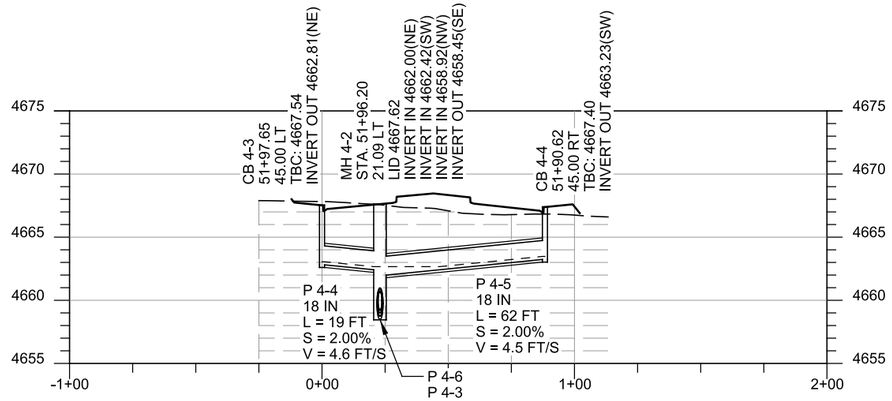

LEGEND:

- FINISHED GRADE
- Existing Grade
- HGL 10-yr

NOTES:

1. SEE DR-01 FOR GENERAL DRAINAGE NOTES.

PRELIMINARY
NOT FOR CONSTRUCTION

UTAH DEPARTMENT OF TRANSPORTATION
HORROCKS ENGINEERS

APPROVED
PROFESSIONAL ENGINEER

MM/DD/YY
DATE

DRAWN BY KKH
QC CHECKED BY JEO

PROJECT: 4150 WEST FROM MAJESTIC RISE
PARKWAY TO 12600 SOUTH

PROJECT NUMBER: F-LC35(316) PIN 15913

DRAINAGE

SHEET NO. DR-04B

EROSION CONTROL LEGEND

GUTTER-INLET BARRIER

SILT FENCE

DRAINAGE PIPE - 18 INCH, REINFORCED CONCRETE, LEAK-RESISTANT REQ'D
[P 5-4] (CB 5-2) TO (MH 5-3)
[P 5-7] (CB 5-4) TO (CB 5-6)
[P 5-9] (CB 5-6) TO (MH 5-4)
[P 5-11] MATCH LINE RT TO (CB 5-6)

APWA 315 CATCH BASIN REQ'D
[CB 5-2]
[CB 5-4]
[CB 5-6]

GUTTER-INLET BARRIER REQ'D

SILT FENCE

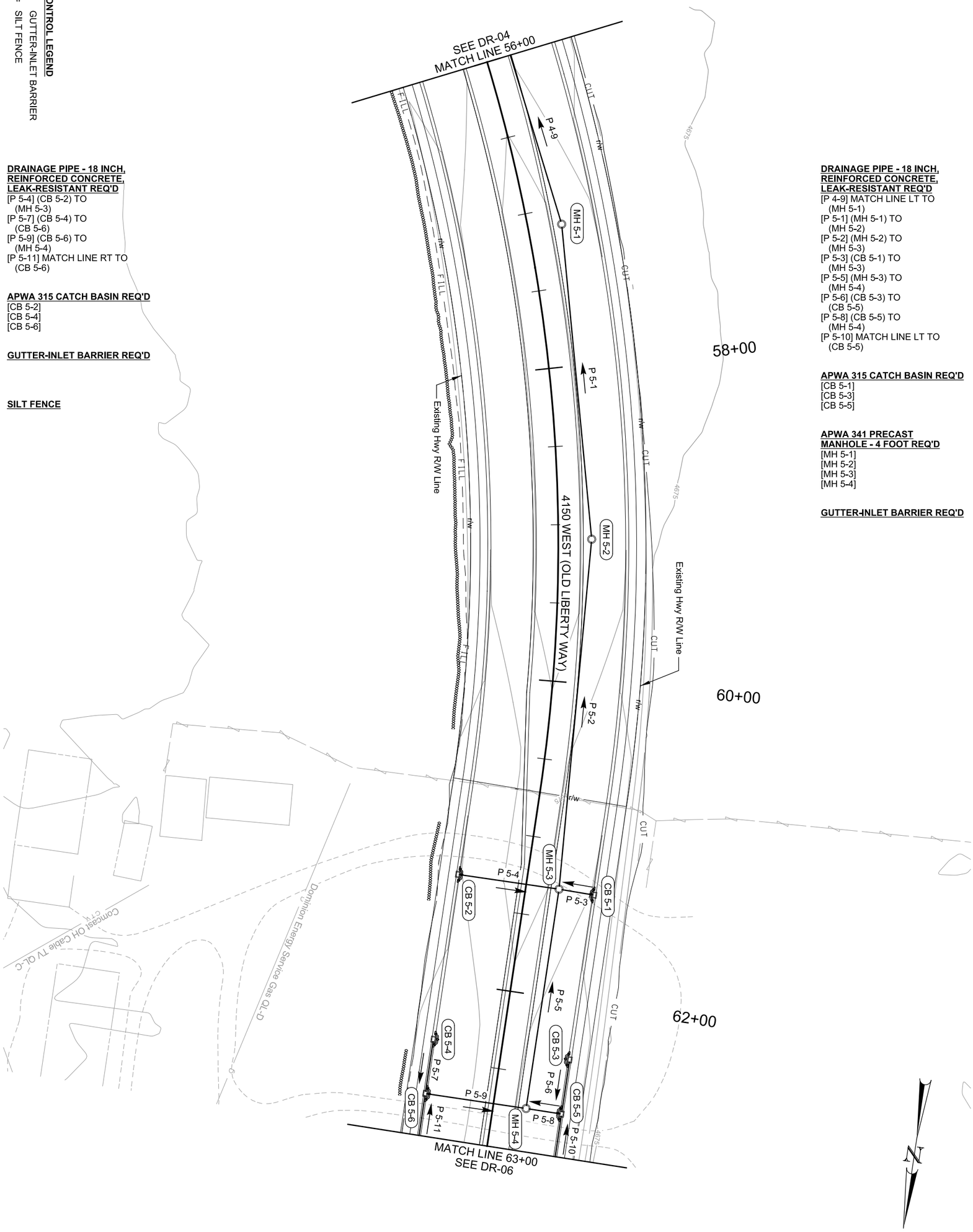

DRAINAGE PIPE - 18 INCH, REINFORCED CONCRETE, LEAK-RESISTANT REQ'D
[P 4-9] MATCH LINE LT TO (MH 5-1)
[P 5-1] (MH 5-1) TO (MH 5-2)
[P 5-2] (MH 5-2) TO (MH 5-3)
[P 5-3] (CB 5-1) TO (MH 5-3)
[P 5-5] (MH 5-3) TO (MH 5-4)
[P 5-6] (CB 5-3) TO (CB 5-5)
[P 5-8] (CB 5-5) TO (MH 5-4)
[P 5-10] MATCH LINE LT TO (CB 5-5)

APWA 315 CATCH BASIN REQ'D
[CB 5-1]
[CB 5-3]
[CB 5-5]

APWA 341 PRECAST MANHOLE - 4 FOOT REQ'D
[MH 5-1]
[MH 5-2]
[MH 5-3]
[MH 5-4]

GUTTER-INLET BARRIER REQ'D

SHEET NO. DR-05	PROJECT	4150 WEST FROM MAJESTIC RISE	**UTAH DEPARTMENT OF TRANSPORTATION**		**PRELIMINARY**
		PARKWAY TO 12600 SOUTH	HORROCKS ENGINEERS		NOT FOR CONSTRUCTION
	PROJECT NUMBER	F-LC35(316) PIN 15913	APPROVED	DRAWN BY KKH	
	DRAINAGE		PROFESSIONAL ENGINEER — MM/DD/YY DATE	QC CHECKED BY JEO	

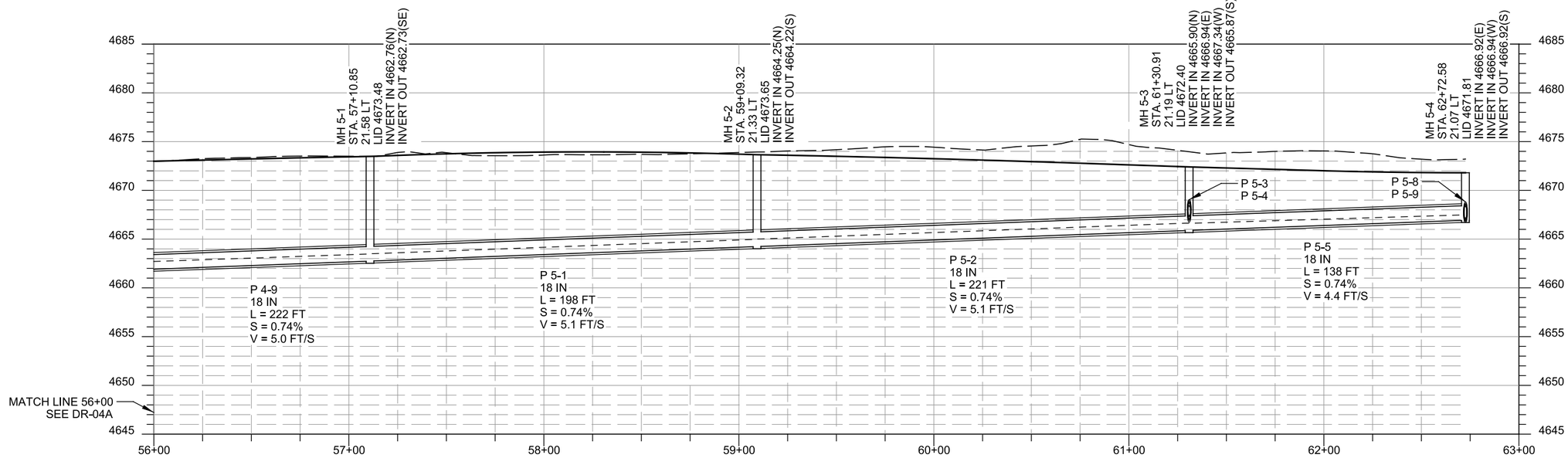

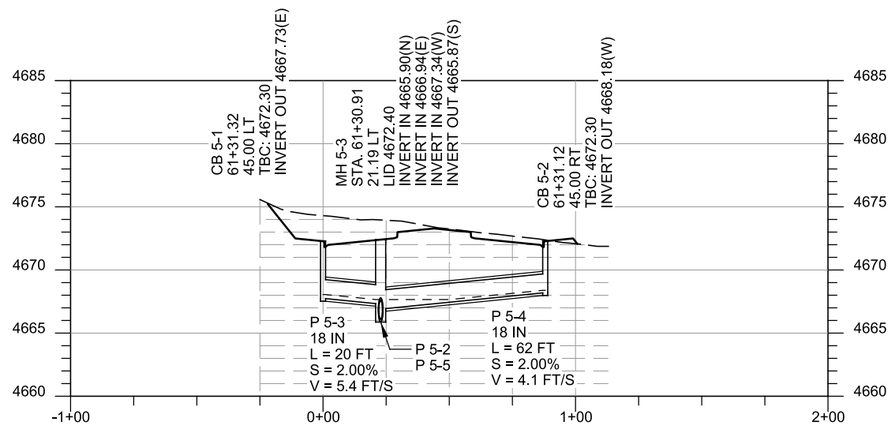

LEGEND:

- FINISHED GRADE
- Existing Grade
- HGL 10-yr

NOTES:

1. SEE DR-01 FOR GENERAL DRAINAGE NOTES.

PRELIMINARY
NOT FOR CONSTRUCTION

UTAH DEPARTMENT OF TRANSPORTATION
HORROCKS ENGINEERS

APPROVED
PROFESSIONAL ENGINEER

DRAWN BY	KKH
QC CHECKED BY	JEO
DATE	MM/DD/YY

PROJECT: 4150 WEST FROM MAJESTIC RISE
PARKWAY TO 12600 SOUTH

PROJECT NUMBER: F-LC35(316) PIN 15913

DRAINAGE

SHEET NO. DR-05A

11/5/2019 9:31:03 AM pw:\\pw.horrocks.com:PWPrimary\Documents\Projects\2019\UT-1926-1909 4150 W Majestic Rise Pkwy to 12600 S\15913\Sheet_Files\Hydraulics\15913_DR-05A.dgn

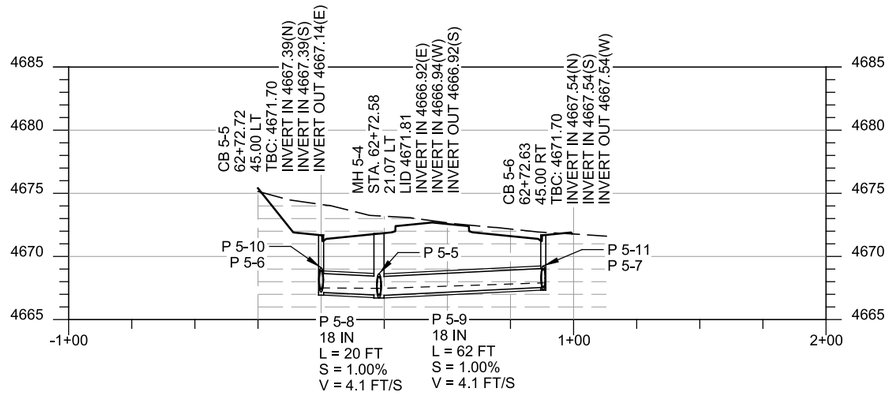

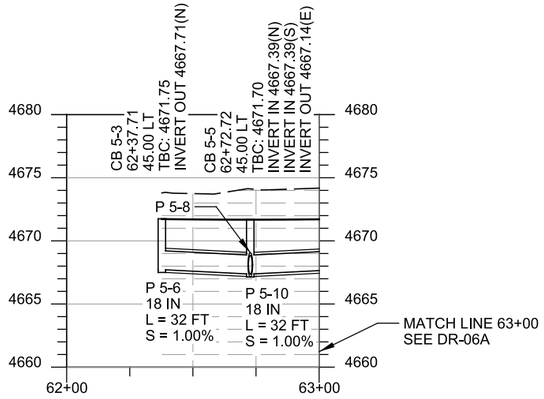

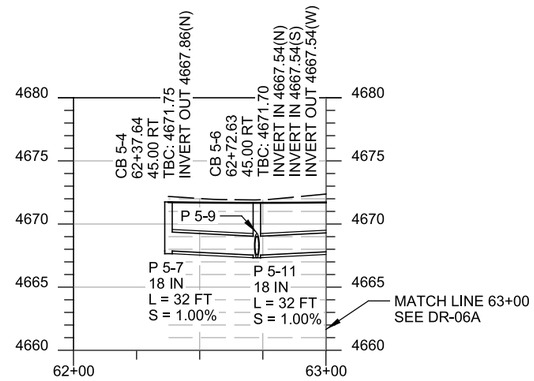

LEGEND:

- FINISHED GRADE
- Existing Grade
- HGL 10-yr

NOTES:

1. SEE DR-01 FOR GENERAL DRAINAGE NOTES.

PRELIMINARY
NOT FOR CONSTRUCTION

UTAH DEPARTMENT OF TRANSPORTATION
HORROCKS ENGINEERS

DRAWN BY KKH
QC CHECKED BY JEO

APPROVED
PROFESSIONAL ENGINEER
MM/DD/YY
DATE

PROJECT: 4150 WEST FROM MAJESTIC RISE
PARKWAY TO 12600 SOUTH
PROJECT NUMBER: F-LC35(316) PIN 15913
DRAINAGE

SHEET NO. DR-05B

11/5/2019 9:31:04 AM pw:\\pw.horrocks.com\PWPrimary\Documents\Projects\2019\UT-1926-1909 4150 W Majestic Rise Pkwy to 12600 S\15913\Sheet_Files\Hydraulics\15913_DR-05B.dgn

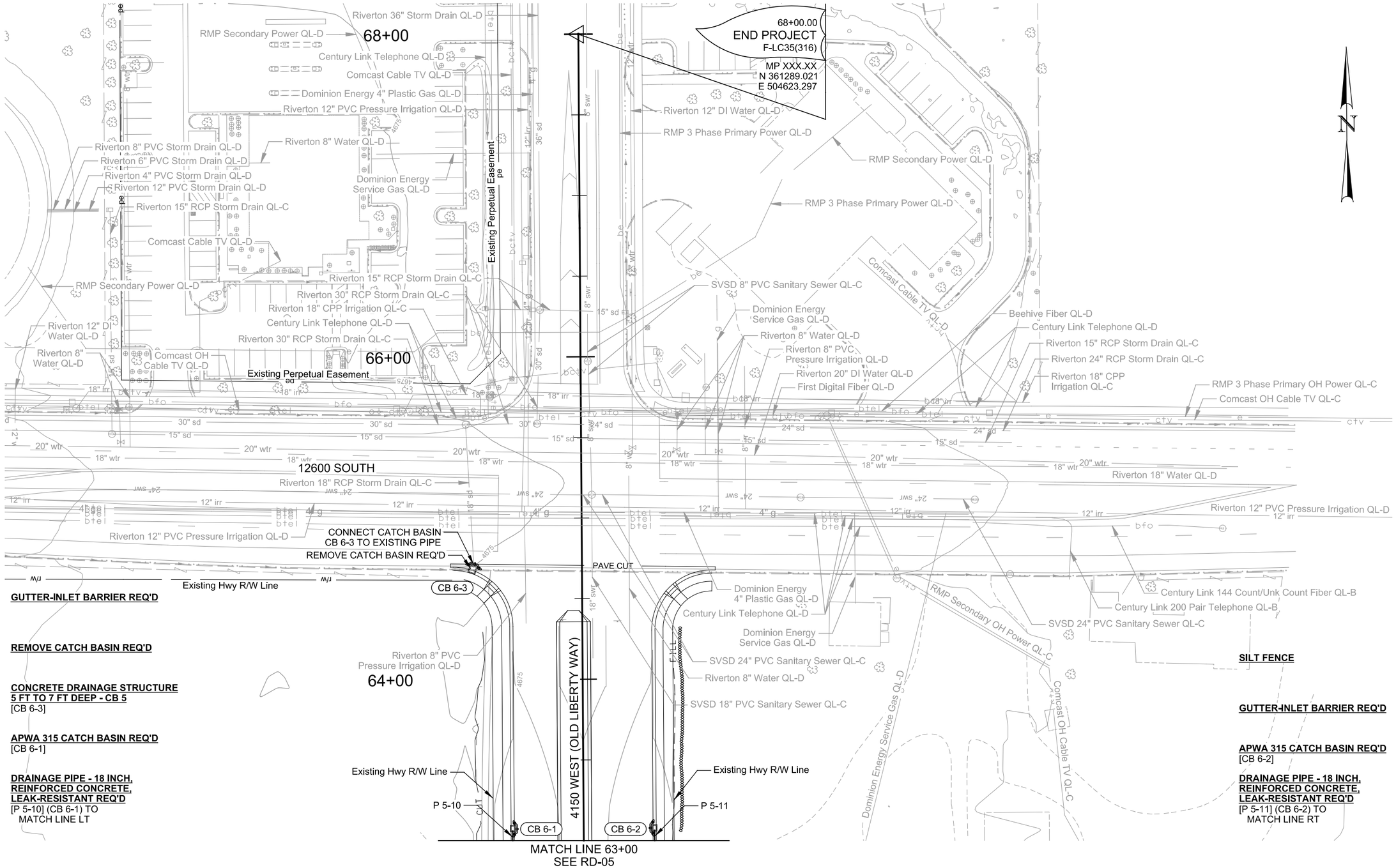

EROSION CONTROL LEGEND

GUTTER-INLET BARRIER

SILT FENCE

PRELIMINARY

NOT FOR CONSTRUCTION

UTAH DEPARTMENT OF TRANSPORTATION

HORROCKS ENGINEERS

DRAWN BY	KKH
QC CHECKED BY	JEO
MM/DD/YY DATE	
APPROVED	
PROFESSIONAL ENGINEER	

4150 WEST FROM MAJESTIC RISE

PARKWAY TO 12600 SOUTH

F-LC35(316)

PIN 15913

DRAINAGE

PROJECT

PROJECT NUMBER

SHEET NO. DR-06

pw:\\pw.horrocks.com\PWPrimary\Documents\Projects\2019\UT-1926-1909 4150 W Majestic Rise Pkwy to 12600 S\15913\Sheet_Files\Hydraulics\15913_DR-06.dgn

11/5/2019 9:31:10 AM

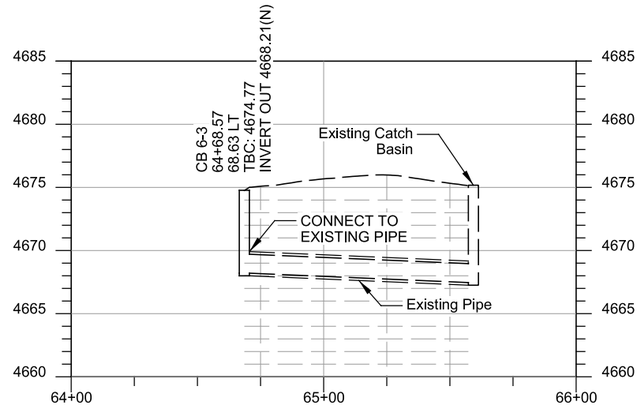

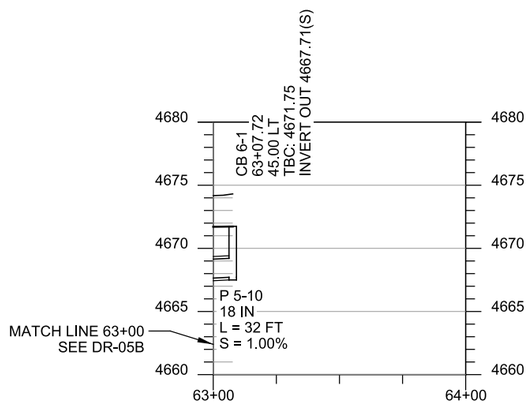

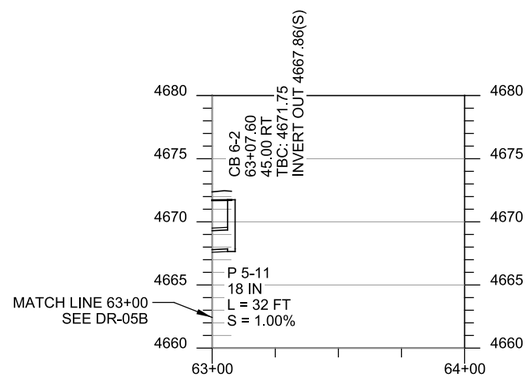

LEGEND:

- FINISHED GRADE
- Existing Grade
- HGL 10-yr

NOTES:

1. SEE DR-01 FOR GENERAL DRAINAGE NOTES.

PRELIMINARY
NOT FOR CONSTRUCTION

UTAH DEPARTMENT OF TRANSPORTATION
HORROCKS ENGINEERS

APPROVED

PROFESSIONAL ENGINEER

MM/DD/YY
DATE

DRAWN BY KKH
QC CHECKED BY JEO

PROJECT: 4150 WEST FROM MAJESTIC RISE
PARKWAY TO 12600 SOUTH

PROJECT NUMBER: F-LC35(316) PIN 15913

DRAINAGE

SHEET NO. DR-06A

APPENDIX E

STORMWATER QUALITY PROJECT DOCUMENTATION